KÖBO-DONGHUA

The Chain People

KÖBO-DONGHUA
The Chain People

Förderketten
Conveyor chains
Chaînes de manutention

KÖBO-DONGHUA

The Chain People

Förderketten für die Holzindustrie & Anbauteile

Lumber conveyor chains & attachments

Chaînes de manutention pour l'industrie du bois & composants

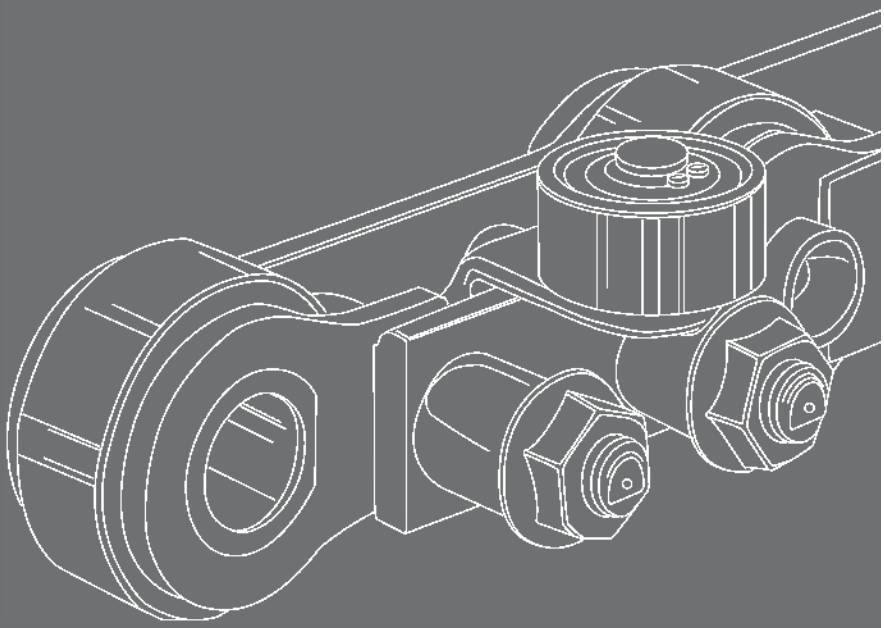

Zertifiziert nach DIN EN ISO 9001

Förderketten für die Holzindustrie & Anbauteile
Lumber conveyor chains & attachments
Chaînes de manutention pour l'industrie du bois & composants

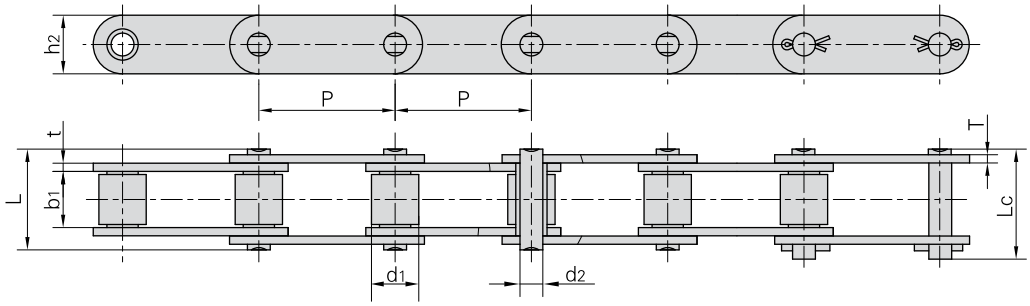

Donghua Chain No. *Donghua Ketten Nr.*	Pitch *Teilung*	Roller diameter *Rollen-durch-messer*	Width between inner plates *Innere Breite*	Pin diameter *Bolzen-durch-messer*	Pin length *Bolzen-länge*		Inner plate depth *Innere Laschen-höhe*	Plate thickness *Laschen-dicke*	Ultimate tensile strength *Min. Bruchkraft*	Average tensile strength *Durchschn. Bruchkraft*	Weight per meter *Gewicht*
	P	d_1 max	b_1 min	d_2 max	L max	Lc max	h_2 max	t/T max	Q min	Q_0	q
	mm	mm	mm	mm	mm	mm	mm	mm	kN/LB	kN	kg/m
81X	66.27	23.00	27.00	11.10	49.0	53.5	28.50	4.00	106.7/24250	128.9	3.78
81XH	66.27	23.00	27.78	11.10	60.7	65.1	31.35	7.94/5.55	151.9/34523	175.7	5.88
81XHE	66.27	22.20	27.00	11.10	59.5	63.0	28.50	6.30	83.3/18927	89.1	5.09
81XF14	66.27	23.00	27.00	11.10	50.8	53.8	28.70	4.00	85.5/19426	91.4	3.78
81XHH	66.27	23.00	27.78	11.10	65.6	70.0	31.35	7.94	191.1/43432	212.6	6.70
81XHS	66.27	23.00	27.00	11.10	63.6	68.0	31.80	7.60	152.0/34545	177.2	6.55
500R	50.00	25.40	25.40	14.63	52.0	56.4	40.00	5.00	100.0/22727	114.5	7.13
441.100R	100.00	25.40	25.40	14.63	52.0	56.4	40.00	5.00	100.0/22727	114.5	5.15

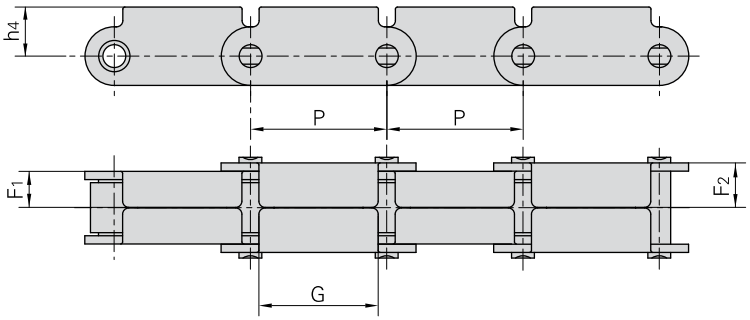

Donghua Chain No. *Donghua Ketten Nr.*	P	F_1	F_2	G	h_4
	mm	mm	mm	mm	mm
81XF1(RT)	66.27	17.5	21.8	58.0	23.85

Förderketten für die Holzindustrie
Lumber conveyor chains
Chaînes de manutention pour l'industrie du bois

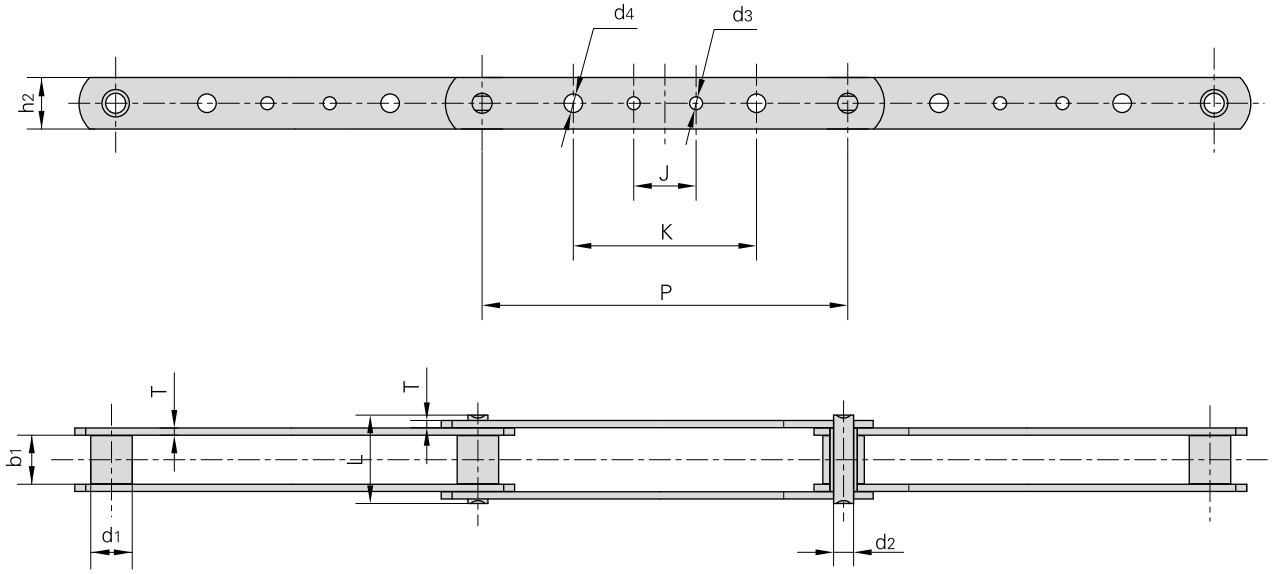

Donghua Chain No. *Donghua Ketten Nr.*	Pitch *Teilung* P mm	Roller diameter *Rollen-durch-messer* d_1 max mm	Width between inner plates *Innere Breite* b_1 min mm	Pin dimension *Bolzen-abmessungen* d_2 max mm	L max mm	Plate dimension *Laschen-abmessungen* h_2 max mm	d_3 max mm	d_4 max mm	J max mm	K max mm	Plate thickness *Laschen-dicke* T max mm	Ultimate tensile strength *Min. Bruchkraft* Q min kN/LB	Average tensile strength *Durchschn. Bruchkraft* Q_0 kN	Weight per meter *Gewicht* q kg/m
3939–B4	203.2	23.0	27.0	11.1	49.0	28.58	7.2	7.2	38.1	101.6	4.0	115.58/26268	136.5	2.45
3939–B21	203.2	23.0	27.0	11.1	49.0	28.58	7.2	–	38.1	–	4.0	115.58/26268	136.5	2.45
3939–B23	203.2	23.0	27.0	11.1	49.0	28.58	–	10.3	–	92.1	4.0	115.58/26268	136.5	2.45
3939–B24	203.2	23.0	27.0	11.1	49.0	28.58	–	7.2	–	101.6	4.0	115.58/26268	136.5	2.48
3939–B40	203.2	23.0	27.0	11.1	49.0	28.58	–	10.3	–	101.6	4.0	115.58/26268	136.5	2.45
3939–B43	203.2	23.0	27.0	11.1	49.0	28.58	7.2	10.3	38.1	92.1	4.0	115.58/26268	136.5	2.42
3939–B44	203.2	23.0	27.0	11.1	49.0	28.58	7.2	10.3	38.1	101.6	4.0	115.58/26268	136.5	2.45
3939H–B4	203.2	23.0	27.0	11.1	58.0	28.60	–	7.2	38.0	102.0	6.4	150.00/34082	172.5	3.51

Verzahnte Laschen
Sharp top chains
Plaques dentées

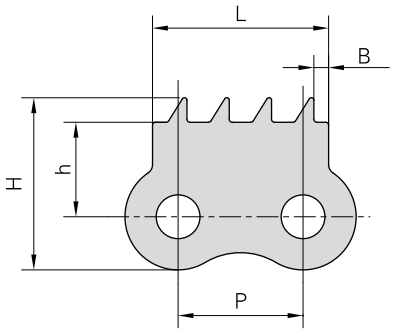

Donghua Chain No. *Donghua Ketten Nr.*	P	h	H	B	L
	mm	mm	mm	mm	mm
08B–940	12.7	9.6	17.5	1.5	17.9

C16AF1 C16A–3PEP

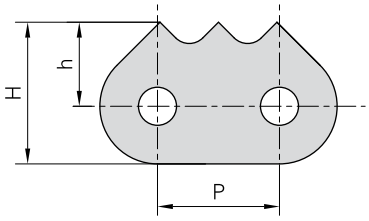

C16AF2 C16A–5PEP C16A–5PEPF1 16A–1171

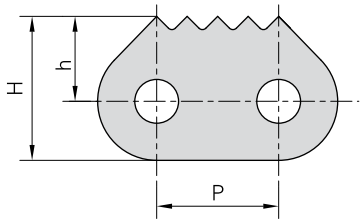

Donghua Chain No. *Donghua Ketten Nr.*	P	h	H
	mm	mm	mm
16A–1171	25.4	16.00	26.40
C16A–3PEP	25.4	17.40	29.00
C16A–5PEP	25.4	17.40	29.00
C16A–5PEPF1	25.4	17.30	29.50
C16AF1	25.4	17.50	29.50
C16AF2	25.4	17.50	29.50

C60F2

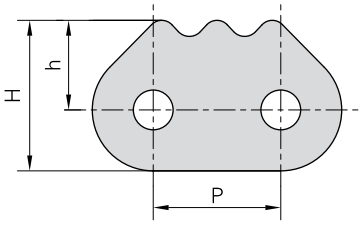

12B–910 60–910

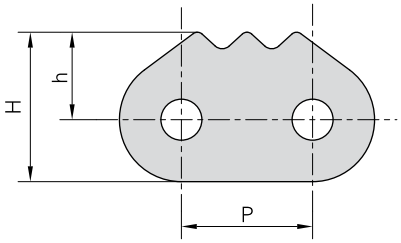

12BF3 C16A–1170

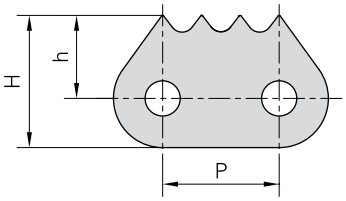

Donghua Chain No. *Donghua Ketten Nr.*	P	h	H
	mm	mm	mm
12BF3	19.05	13.50	21.50
12B–910	19.05	13.70	21.70
60–910	19.05	12.70	21.70
C60F2	19.05	13.38	22.48
C16A–1170	25.40	16.50	28.00

Verzahnte Laschen
Sharp top chains
Plaques dentées

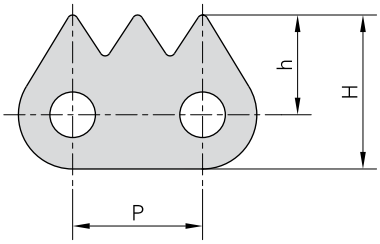

Donghua Chain No. *Donghua Ketten Nr.*	P	h	H
	mm	mm	mm
08BF71	12.7	9.75	15.05

Donghua Chain No. *Donghua Ketten Nr.*	P	h	H	L
	mm	mm	mm	mm
10AF42	15.875	11.5	19.0	30.9
12B–911	19.050	11.9	20.0	35.0

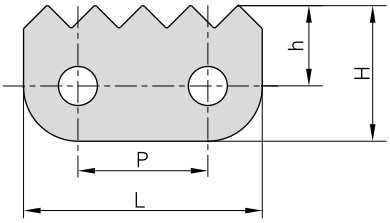

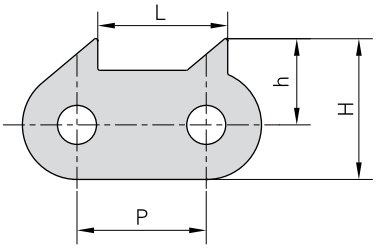

Donghua Chain No. *Donghua Ketten Nr.*	P	h	H	L
	mm	mm	mm	mm
C12B–9010	19.05	13.0	21.0	19.05
C12B–940	19.05	13.2	22.3	19.75

Donghua Chain No. *Donghua Ketten Nr.*	P	h	H	L
	mm	mm	mm	mm
16B–1187	25.4	16.0	26.5	46

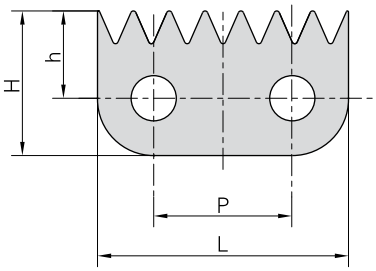

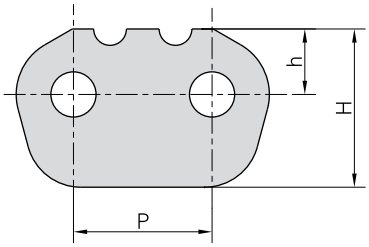

Donghua Chain No. *Donghua Ketten Nr.*	P	h	H
	mm	mm	mm
16BF45	25.4	12.0	29.0

Verzahnte Laschen
Sharp top chains
Plaques dentées

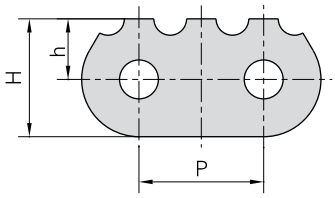

Donghua Chain No. *Donghua Ketten Nr.*	P	h	H
	mm	mm	mm
60–911	19.05	9.25	18.00
60–912	19.05	9.20	17.95

C16A–1160

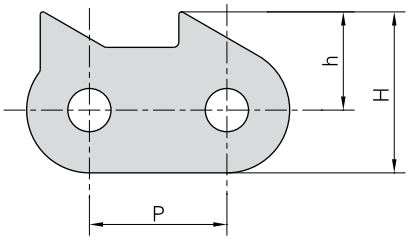

Donghua Chain No. *Donghua Ketten Nr.*	P	h	H
	mm	mm	mm
C16A–1160	25.4	18	29.5

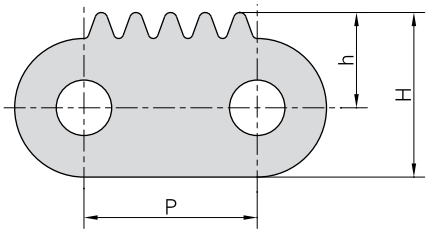

Donghua Chain No. *Donghua Ketten Nr.*	P	h	H
	mm	mm	mm
LL1044F1	15.875	8.73	15.08

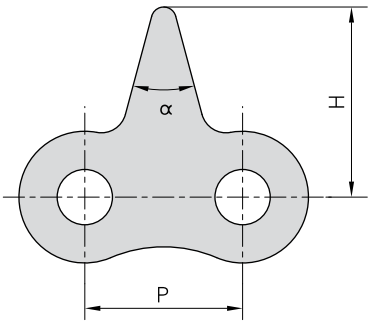

Donghua Chain No. *Donghua Ketten Nr.*	P	H	α
	mm	mm	
06BF39	9.525	11.00	30°
08AF10	12.700	15.60	30°
08BF30	12.700	14.50	30°
08BF38	12.700	14.60	40°
08BF5	12.700	15.30	30°
08BF51	12.700	14.00	50°
08BF56	12.700	14.40	30°
08BF86	12.700	15.00	50°
08BSSF11	12.700	14.60	40°
10AF7	15.875	15.88	21°
10BF40	15.875	17.40	25°
12B–1STCF1	19.050	19.00	30°
16AF44	25.400	31.80	50°
20A–1STCF1	31.750	53.00	82.1°

Verzahnte Laschen
Sharp top chains
Plaques dentées

Donghua Chain No. *Donghua Ketten Nr.*	P	h	H	L
	mm	mm	mm	mm
C16B–1160	25.4	10.5	27.5	4.8
C16B–1161	25.4	10.5	27.5	6.0

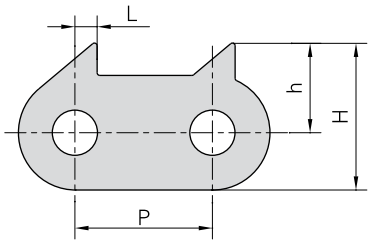

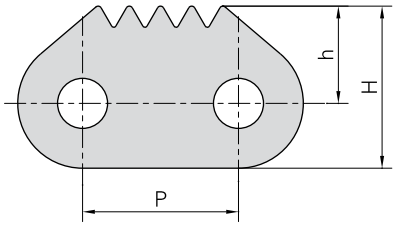

Donghua Chain No. *Donghua Ketten Nr.*	P	h	H
	mm	mm	mm
C20BF9	31.75	19.8	33.0

Donghua Chain No. *Donghua Ketten Nr.*	P	h	H
	mm	mm	mm
24B–1810	38.1	19	35.5
120F6	38.1	21	38.5

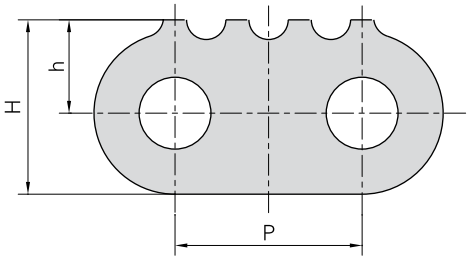

Donghua Chain No. *Donghua Ketten Nr.*	P	h	H	L
	mm	mm	mm	mm
32BF4	50.8	26	70.0	30

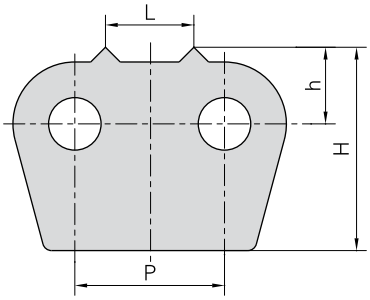

Verzahnte Laschen
Sharp top chains
Plaques dentées

C16BF2

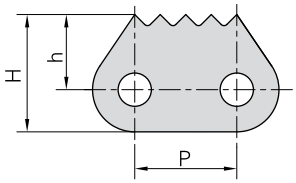

C16BF3

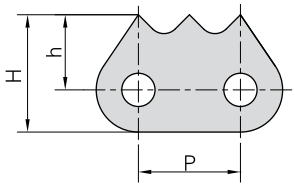

16B–1170 16B–1172 C24B–4STC

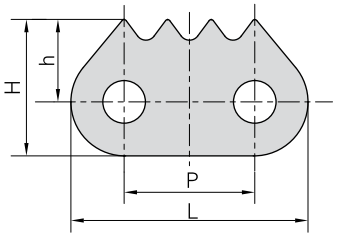

16B–1180

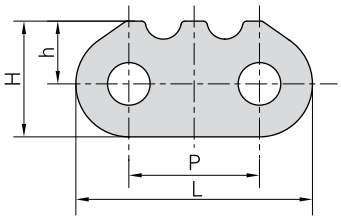

Donghua Chain No. *Donghua Ketten Nr.*	P	L	h	H
	mm	mm	mm	mm
C16BF2	25.4	46.4	18.7	29.2
C16BF3	25.4	46.4	18.7	29.2
16B–1170	25.4	46.1	16.0	26.5
16B–1180	25.4	46.0	12.2	22.5
16B–1172	25.4	46.1	15.0	25.5
C24B–4STC	38.1	70.4	18.3	35.0

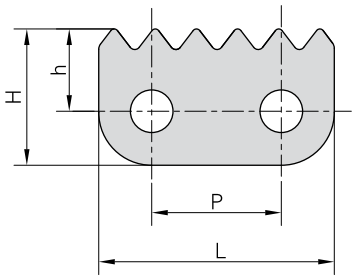

Donghua Chain No. *Donghua Ketten Nr.*	P	L	h	H
	mm	mm	mm	mm
16B–1185	25.4	46.0	16.0	26.5
16B–6STC	25.4	46.0	16.0	26.5

Verzahnte Laschen
Sharp top chains
Plaques dentées

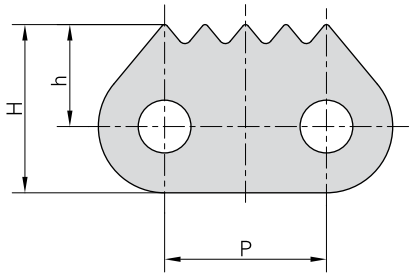

Donghua Chain No. *Donghua Ketten Nr.*	P	h	H
	mm	mm	mm
C12BF56	19.05	13.0	22.0
16BF24	25.40	16.0	26.4
16BF29	25.40	15.9	26.4
C24B–1831	38.10	22.5	39.0
24A–1–STA	38.10	21.0	38.5
C12BF56–STC	19.50	13.0	22.0

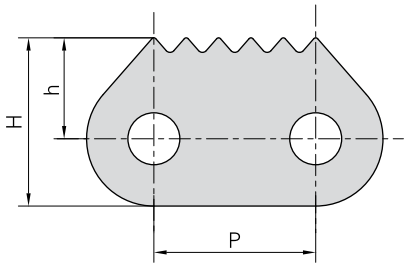

Donghua Chain No. *Donghua Ketten Nr.*	P	h	H
	mm	mm	mm
20BF8	31.75	19.8	33.0
20B–1310	31.75	19.8	33.0
C24B–6STCF1	38.10	23.5	40.0

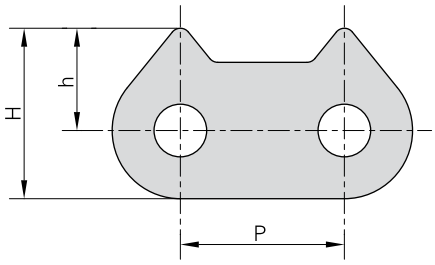

Donghua Chain No. *Donghua Ketten Nr.*	P	h	H
	mm	mm	mm
20B–1350	31.75	19.8	33.0

Verzahnte Laschen
Sharp top chains
Plaques dentées

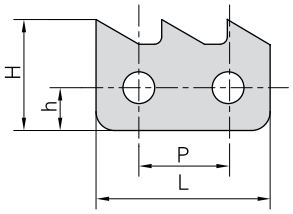

Donghua Chain No. *Donghua Ketten Nr.*	P	L	h	H
	mm	mm	mm	mm
20AF1	31.75	57.2	14.75	35.84

Donghua Chain No. *Donghua Ketten Nr.*	P	L	h	H
	mm	mm	mm	mm
120–1802	38.1	73.1	21.0	38.5

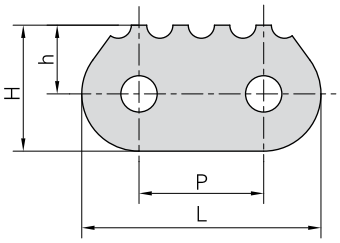

24B–1805

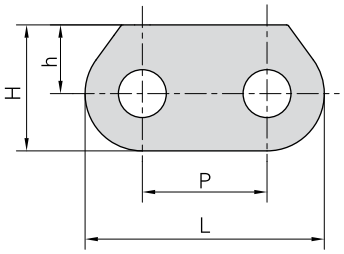

24B–1807

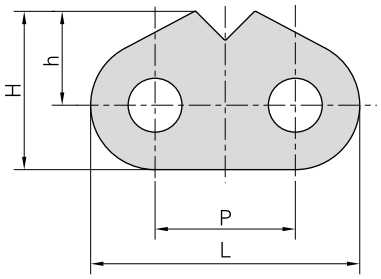

C24B–1820

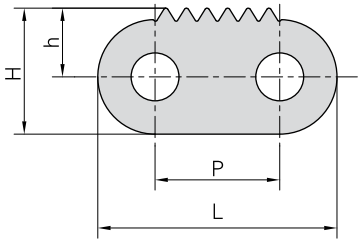

24B–1809

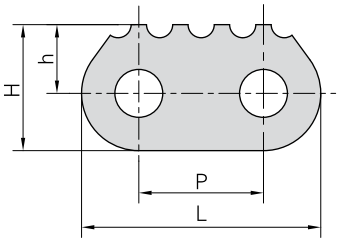

Donghua Chain No. *Donghua Ketten Nr.*	P	L	h	H
	mm	mm	mm	mm
24B–1805	38.1	73.1	21.0	38.5
24B–1807	38.1	73.1	25.5	43.0
24B–1809	38.1	73.1	21.0	38.5
C24B–1820	38.1	73.1	21.0	38.5

Verzahnte Laschen
Sharp top chains
Plaques dentées

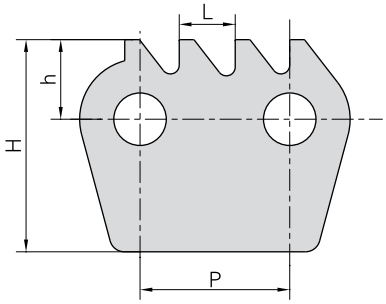

Donghua Chain No. *Donghua Ketten Nr.*	P	h	H	L
	mm	mm	mm	mm
32B–1875	50.8	27	72.0	19.0
32BF20–1875	50.8	30	74.0	13.5

Donghua Chain No. *Donghua Ketten Nr.*	P	h	H	L
	mm	mm	mm	mm
32B–1876	50.8	27	72.0	50.8

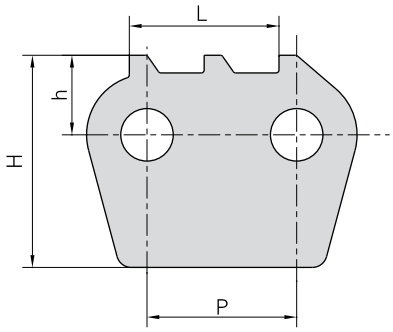

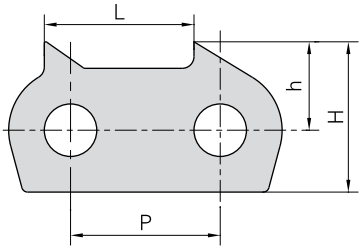

Donghua Chain No. *Donghua Ketten Nr.*	P	h	H	L
	mm	mm	mm	mm
32B–1877	50.8	30	51	50.8

Donghua Chain No. *Donghua Ketten Nr.*	P	h	H	L
	mm	mm	mm	mm
32B–1878	50.8	27	72	50.8

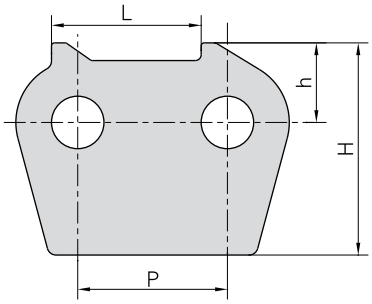

Förderketten mit verzahnten Laschen
Sharp top chains
Chaînes de manutention avec plaques dentées

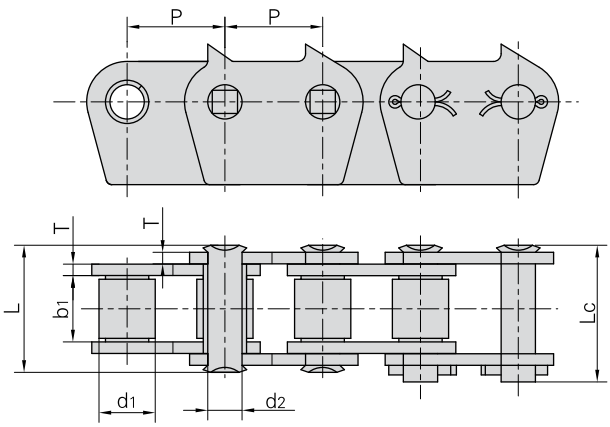

Donghua Chain No. *Donghua Ketten Nr.*	Pitch *Teilung*	Roller diameter *Rollen-durch-messer*	Width between inner plates *Innere Breite*	Pin diameter *Bolzen-durch-messer*	Pin length *Bolzen-länge*		Plate thickness *Laschen-dicke*	Ultimate tensile strength *Min. Bruchkraft*	Average tensile strength *Durchschn. Bruchkraft*	Weight per meter *Gewicht*
	P	d_1 max	b_1 min	d_2 max	L max	Lc max	T max	Q min	Q_0	q
	mm	mm	mm	mm	mm	mm	mm	kN/LB	kN	kg/m
32B–1–1872	50.8	29.21	33.0	17.81	66.0	71.0	6.0	250.0/56818	275.0	13.54

32B–1872

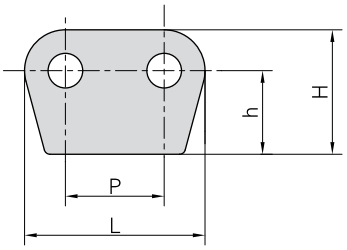

32B–1874 32B–1900F1
32BF15 C32B–1874F1

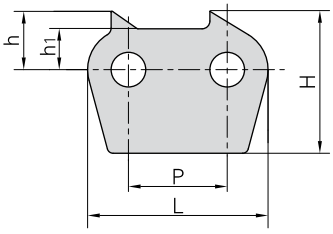

Donghua Chain No. *Donghua Ketten Nr.*	P	L	h_1	h	H
	mm	mm	mm	mm	mm
32B–1872	50.8	92.8	–	43.0	64.0
32B–1874	50.8	92.8	21.0	30.0	73.0
32B–1900F1	50.8	92.8	21.0	30.0	75.0
32BF15	50.8	91.8	20.0	45.0	75.0
C32B–1874F1	50.8	92.8	21.0	40.0	83.0

Förderketten mit verzahnten Laschen
Sharp top chains
Chaînes de manutention avec plaques dentées

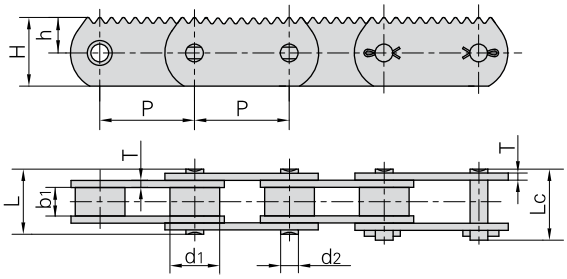

Donghua Chain No. *Donghua Ketten Nr.*	P	h	H
	mm	mm	mm
P80	80.0	30	58

Donghua Chain No. *Donghua Ketten Nr.*	Pitch *Teilung*	Roller diameter *Rollen-durch-messer*	Width between inner plates *Innere Breite*	Pin diameter *Bolzen-durch-messer*	Pin length *Bolzen-länge*		Plate thickness *Laschen-dicke*	Ultimate tensile strength *Min. Bruchkraft*	Average tensile strength *Durchschn. Bruchkraft*	Weight per meter *Gewicht*
	P	d_1 max	b_1 min	d_2 max	L max	Lc max	T max	Q min	Q_0	q
	mm	mm	mm	mm	mm	mm	mm	kN/LB	kN	kg/m
P80	80.0	42.0	24.0	15.0	55.0	60.0	6.0	250.0/56818	275.0	11.3

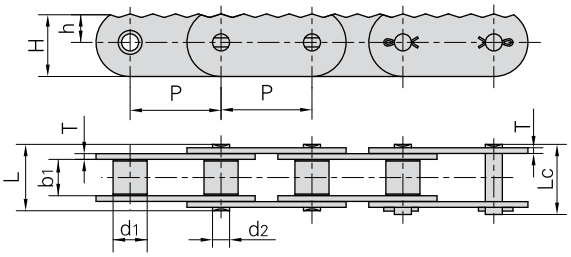

Donghua Chain No. *Donghua Ketten Nr.*	P	h	H
	mm	mm	mm
P80F3	80.0	25	55
P80F32	80.0	20	40

Donghua Chain No. *Donghua Ketten Nr.*	Pitch *Teilung*	Roller diameter *Rollen-durch-messer*	Width between inner plates *Innere Breite*	Pin diameter *Bolzen-durch-messer*	Pin length *Bolzen-länge*		Plate thickness *Laschen-dicke*	Ultimate tensile strength *Min. Bruchkraft*	Average tensile strength *Durchschn. Bruchkraft*	Weight per meter *Gewicht*
	P	d_1 max	b_1 min	d_2 max	L max	Lc max	T max	Q min	Q_0	q
	mm	mm	mm	mm	mm	mm	mm	kN/LB	kN	kg/m
P80F3	80.0	30.0	32.0	15.0	58.6	62.6	5.0	98.0/20909	107.0	9.12
P80F32	80.0	30.0	30.0	15.0	63.0	72.0	6.0	112/25194	123.2	7.28

Förderketten mit verzahnten Laschen
Sharp top chains
Chaînes de manutention avec plaques dentées

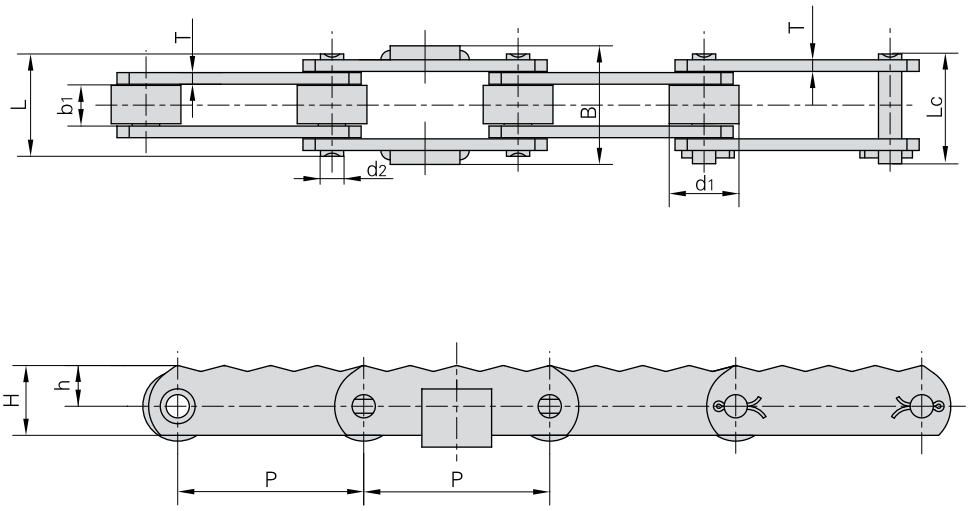

Donghua Chain No. *Donghua Ketten Nr.*	P	h	H	B
	mm	mm	mm	mm
P80F2	80.0	17.5	30.0	51

Donghua Chain No. *Donghua Ketten Nr.*	Pitch *Teilung*	Roller diameter *Rollen-durch-messer*	Width between inner plates *Innere Breite*	Pin diameter *Bolzen-durch-messer*	Pin length *Bolzen-länge*		Plate thickness *Laschen-dicke*	Ultimate tensile strength *Min. Bruchkraft*	Average tensile strength *Durchschn. Bruchkraft*	Weight per meter *Gewicht*
	P	d_1 max	b_1 min	d_2 max	L max	Lc max	T max	Q min	Q_0	q
	mm	mm	mm	mm	mm	mm	mm	kN/LB	kN	kg/m
P80F2	80.0	30.0	18.0	10.0	44.6	48.3	5.0	61.74/14030	70.0	4.15

KÖBO-DONGHUA

The Chain People

Verschiedene Förderketten
Various conveyor chains
Autres chaînes de manutention

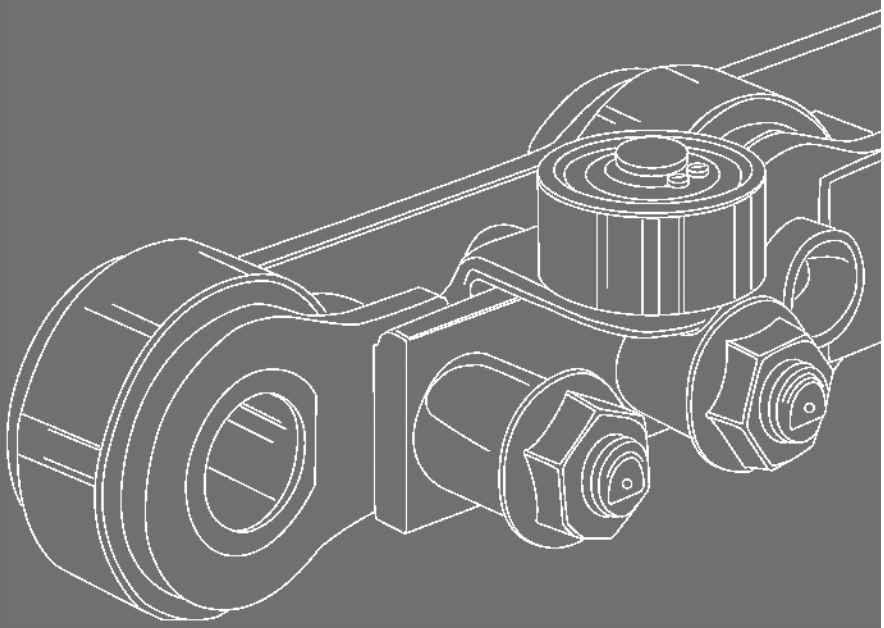

Zertifiziert nach DIN EN ISO 9001

Förderketten (M Serie)
Conveyor chains (M series)
Chaînes de manutention (Série M)

1.without rollers
1.*ohne Rollen*

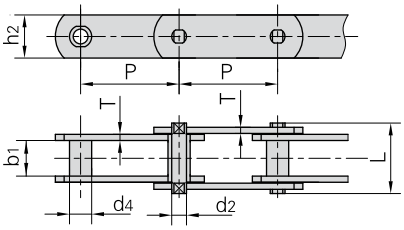

2.with A small rollers type
2.*mit A-Schonrollen*

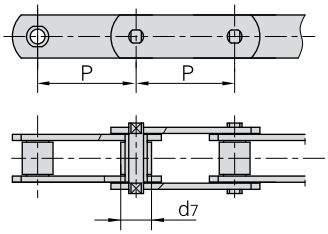

3.with B large rollers type
3.*mit B-Laufrollen*

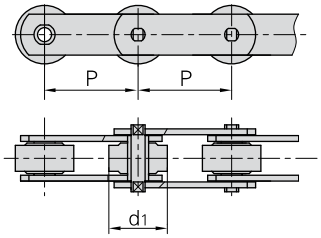

4.with D flanged rollers type
4.*mit D-Bundlaufrolle*

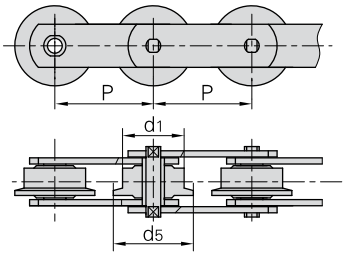

5.Welded pins with plates
5.*an den Laschen geschweißte Nietbolzen*

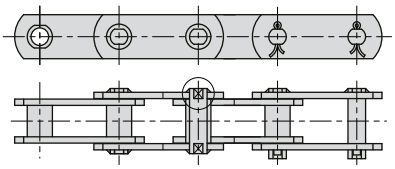

ISO Chain No. *ISO Ketten Nr.*	Pitch *Teilung* P mm								Roller diameter *Rollen-durchmesser* d_1 max mm	d_7 max mm	d_5 max mm	Bush diameter *Buchsen-durchmesser* d_4 max mm
M20	*40.0	50.0	63.0	80.0	100.0	125.0	160.0		25.0	12.5	32.0	9.0
M28	*50.0	63.0	80.0	100.0	125.0	160.0	200.0		30.0	15.0	36.0	10.0
M40	63.0	80.0	100.0	125.0	160.0	200.0	250.0		36.0	18.0	42.0	12.5
M56	*63.0	80.0	100.0	125.0	160.0	200.0	250.0		42.0	21.0	50.0	15.0
M80	80.0	100.0	125.0	160.0	200.0	250.0	315.0		50.0	25.0	60.0	18.0
M112	*80.0	100.0	125.0	160.0	200.0	250.0	315.0	400.0	60.0	30.0	70.0	21.0
M160	*100.0	125.0	160.0	200.0	250.0	315.0	400.0	500.0	70.0	36.0	85.0	25.0
M224	*125.0	160.0	200.0	250.0	315.0	400.0	500.0	630.0	85.0	42.0	100.0	30.0
M315	*160.0	200.0	250.0	315.0	400.0	500.0	630.0		100.0	50.0	120.0	36.0
M450	200.0	250.0	315.0	400.0	500.0	630.0	800.0		120.0	60.0	140.0	42.0

ISO Chain No. *ISO Ketten Nr.*	Width between inner plates *Innere Breite* b_1 min mm	Pin diameter *Bolzen-durchmesser* d_2 max mm	Pin length *Bolzen-länge* L max mm	Plate depth *Laschen-höhe* h_2 max mm	Plate thickness *Laschen-dicke* T max mm	Ultimate tensile strength *Min. Bruchkraft* Q min kN/LB	Average tensile strength *Durchschn. Bruchkraft* Q_0 kN
M20	16.0	6.0	35.0	19.0	2.5	20.0/4545	25.0
M28	18.0	7.0	40.0	21.0	3.0	28.0/6364	35.0
M40	20.0	8.5	45.0	26.0	3.5	40.0/9091	50.0
M56	24.0	10.0	52.0	31.0	4.0	56.0/12727	70.0
M80	28.0	12.0	62.0	36.0	5.0	80.0/18182	100.0
M112	32.0	15.0	73.0	41.0	6.0	112.0/25454	140.0
M160	37.0	18.0	85.0	51.0	7.0	160.0/36364	200.0
M224	43.0	21.0	98.0	62.0	8.0	224.0/50909	280.0
M315	48.0	25.0	112.0	72.0	10.0	315.0/71591	393.7
M450	56.0	30.0	135.0	82.0	12.0	450.0/102272	562.5

*Chain has bush and small roller only
**Ketten nur mit Buchsen und Schonrollen.*

Förderketten (M Serie)
Conveyor chains (M series)
Chaînes de manutention (Série M)

DIN Chain No. *DIN Ketten Nr.*	Pitch *Teilung* P mm							Roller diameter *Rollen-durchmesser* d_1 max mm	d_7 max mm	d_5 max mm	Bush diameter *Buchsen-durch-messer* d_4 max mm
M20	40.0	50.0	63.0	80.0	100.0	125.0	160.0	25.0	12.50	30.00	9.0
M28	50.0	63.0	80.0	100.0	125.0	160.0	200.0	30.0	15.00	36.00	10.0
M40	63.0	80.0	100.0	125.0	160.0	200.0	250.0	36.0	18.00	42.00	12.5
M56	63.0	80.0	100.0	125.0	160.0	200.0	250.0	42.0	21.00	50.00	15.0
M80	80.0	100.0	125.0	160.0	200.0	250.0	315.0	50.0	25.00	60.00	18.0
M112	80.0	100.0	125.0	160.0	200.0	250.0	315.0	60.0	30.00	70.00	21.0
M160	100.0	125.0	160.0	200.0	250.0	315.0	400.0	70.0	36.00	85.00	25.0
M224	125.0	160.0	200.0	250.0	315.0	400.0	500.0	85.0	42.00	100.00	30.0
M315	160.0	200.0	250.0	315.0	400.0	500.0	630.0	100.0	50.00	120.00	36.0
M450	200.0	250.0	315.0	400.0	500.0	630.0	800.0	120.0	60.00	140.00	42.0

DIN Chain No. *DIN Ketten Nr.*	Width between inner plates *Innere Breite* b_1 min mm	Pin diameter *Bolzen-durch-messer* d_2 max mm	Pin length *Bolzen-länge* L max mm	Plate depth *Laschen-höhe* h_2 max mm	Plate thickness *Laschen-dicke* T max mm	Ultimate tensile strength *Min. Bruchkraft* Q min kN/LB	Average tensile strength *Durchschn. Bruchkraft* Q_0 kN
M20	16.0	6.0	35.0	18.0	2.5	20.0/4545	25.0
M28	18.0	7.0	40.0	20.0	3.0	28.0/6364	35.0
M40	20.0	8.5	45.0	25.0	3.5	40.0/9091	50.0
M56	24.0	10.0	52.0	30.0	4.0	56.0/12727	70.0
M80	28.0	12.0	62.0	35.0	5.0	80.0/18182	100.0
M112	32.0	15.0	73.0	40.0	6.0	112.0/25454	140.0
M160	37.0	18.0	85.0	50.0	7.0	160.0/36364	200.0
M224	43.0	21.0	98.0	60.0	8.0	224.0/50909	280.0
M315	48.0	25.0	112.0	70.0	10.0	315.0/71591	393.7
M450	56.0	30.0	135.0	80.0	12.0	450.0/102272	562.5

Förderketten (M Serie)
Conveyor chains (M series)
Chaînes de manutention (Série M)

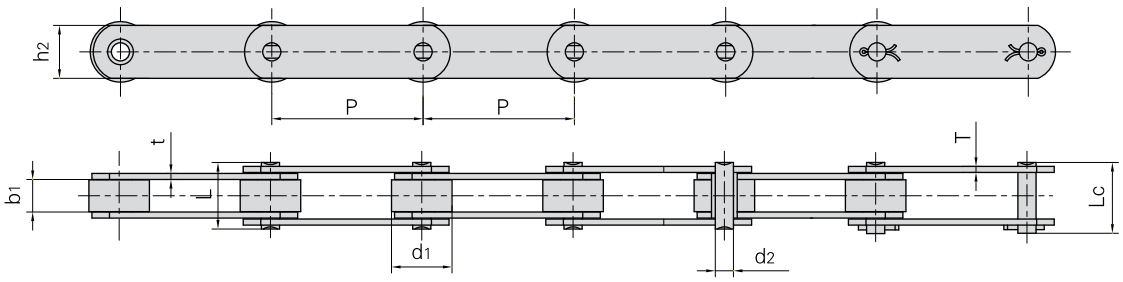

Donghua Chain No. *Donghua Ketten Nr.*	Pitch *Teilung*	Roller diameter *Rollen-durch-messer*	Width between inner plates *Innere Breite*	Pin diameter *Bolzen-durch-messer*	Pin length *Bolzen-länge*		Inner plate depth *Laschen-höhe*	Plate thickness *Laschen-dicke*	Ultimate tensile strength *Min. Bruchkraft*	Average tensile strength *Durchschn. Bruchkraft*	Weight per meter *Gewicht*
	P	d_1 max	b_1 min	d_2 max	L max	Lc max	h_2 max	t / T max	Q min	Q_0	q
	mm	mm	mm	mm	mm	mm	mm	mm	kN/LB	kN	kg/m
M18F1–P–50	50.0	25.00	11.50	5.72	26.0	28.2	18.0	2.5	18.0/4050	20.0	1.81
M22–P–50	50.0	25.00	11.50	8.00	28.0	30.9	20.0	3.0	22.0/4950	24.2	2.64
M22F1–P–50	50.0	25.00	12.00	10.00	29.4	32.6	20.0	3.0	22.0/4950	24.2	2.30
M35F2–S–35	35.0	14.00	14.00	7.00	31.0	34.0	18.0	3.5/2.5	35.0/7874	39.0	1.82
M35F2–P–35	35.0	22.00	14.00	7.00	31.0	34.0	18.0	3.5/2.5	35.0/7874	39.0	2.47
*M35F3–B–35	35.0	14.00	14.00	6.00	30.2	33.0	18.0	3.0	35.0/7874	39.0	1.73
M35F11–P–35	35.0	20.00	16.00	7.00	31.0	34.0	18.0	2.50	35.0/7874	39.0	2.22
M35F4–C–69	69.0	25.00	12.00	7.00	27.5	30.0	19.0	2.5	35.0/7874	39.0	1.60
M35F5–P–50.8	50.8	25.00	16.00	7.00	33.0	36.0	20.0	3.0	35.0/7874	39.0	2.48
M40F17–P–50.8	50.8	31.00	15.20	13.35	38.0	42.8	25.0	5.0/4.0	53.9/12127	59.2	4.45
M40–PF1–100	100.0	36.00	20.00	8.50	40.5	44.5	25.0	3.5	40.0/9000	44.0	3.28
M40F4–P–50	50.0	31.75	15.00	10.00	36.6	39.0	25.0	4.0	40.0/9000	44.0	4.00
M28F4–S–50	50.0	15.00	17.00	7.00	33.0	36.5	20.0	3.0	28.0/6300	35.0	1.88
M35F10–P–50	50.0	20.00	16.00	7.00	33.0	36.0	25.0	3.0	35.0/7874	39.0	2.53
M35F9–P–50	50.0	25.00	16.00	6.00	30.4	32.7	18.0	2.5	33.0/7425	36.0	2.23
M20–PF1–50	50.0	30.00	16.00	6.00	31.0	33.5	18.0	2.5	20.0/4500	22.0	2.60
M40F5–S–65	65.0	24.00	15.00	10.00	36.6	39.0	30.0	4.0	40.0/9000	44.0	4.86
M40F6–P–80	80.0	36.00	20.00	8.50	41.0	44.2	25.0	4.0	40.0/9000	44.0	3.68
M56F14–S–63	63.0	21.00	24.00	10.00	46.0	49.5	30.0	4.0	56.0/12600	61.6	3.81
M28F5–P–63	63.0	30.00	18.00	7.00	42.0	45.5	5.00	5.0	40.0/9000	50.0	4.23
M56F14–S–80	80.0	21.00	24.00	10.00	46.0	49.5	30.0	4.0	56.0/12600	61.6	3.27
M80F8–S–80	80.0	25.00	28.00	12.00	55.0	58.5	35.0	5.0	80.0/18000	88.0	5.11
M80F9–S–80	80.0	25.00	28.00	12.00	54.5	59.0	35.0	5.0	80.0/18000	88.0	5.07
M56F14–P–100	100.0	42.00	24.00	10.00	46.0	49.5	30.0	4.0	56.0/12600	61.6	5.00
M75–P–75	75.0	40.00	22.00	12.00	44.0	47.0	35.0	4.0	75.0/16870	75.0	5.88
M80F3–P–125	125.0	50.00	28.00	11.00	55.0	58.5	35.0	5.0	80.0/18000	88.0	6.72
M80F4–A–100	100.0	25.00	28.00	12.00	55.0	58.5	35.0	5.0	80.0/18000	88.0	4.63
M80F6–P–75	75.0	35.00	14.00	12.00	40.5	45.0	30.0	5.0	80.0/18000	88.0	4.80
*M80F8–B–100	100.0	18.00	28.00	12.00	55.0	58.5	35.0	5.0	80.0/18000	88.0	4.14
*M80F8–B–80	80.0	18.00	28.00	12.00	55.0	58.5	35.0	5.0	80.0/18000	88.0	4.48
M100–P–80	80.0	47.50	31.40	15.90	71.2	76.0	40.0	8.0	100.0/22727	110.0	12.36
M112F2–P–125	125.0	55.00	50.00	16.00	87.1	91.6	40.0	7.2	112.0/25200	123.2	13.35

*Bushing chain: d_1 in the table indicate the external diameter of the bushing.
**Buchsenketten: In dieser Tabelle zeigt d_1 den Außendurchmesser der Buchsen.*

Förderketten (M Serie)
Conveyor chains (M series)
Chaînes de manutention (Série M)

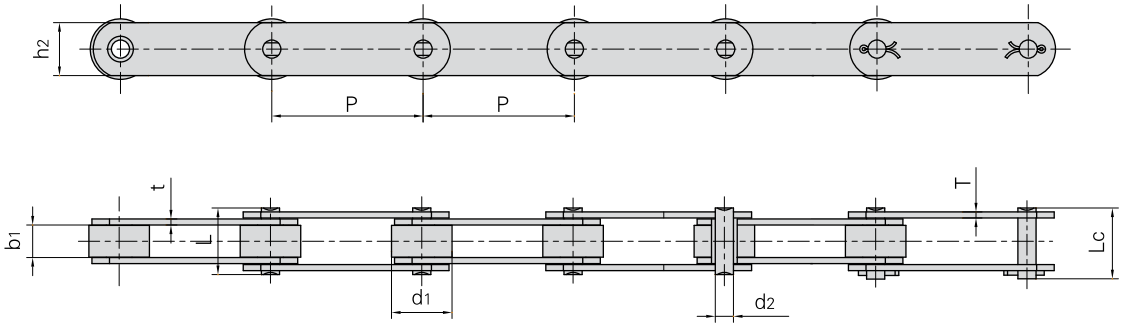

Donghua Chain No. *Donghua Ketten Nr.*	Pitch *Teilung*	Roller diameter *Rollen-durch-messer*	Width between inner plates *Innere Breite*	Pin diameter *Bolzen-durch-messer*	Pin length *Bolzen-länge*		Inner plate depth *Laschen-höhe*	Plate thickness *Laschen-dicke*	Ultimate tensile strength *Min. Bruchkraft*	Average tensile strength *Durchschn. Bruchkraft*	Weight per meter *Gewicht*
	P	d_1 max	b_1 min	d_2 max	L max	Lc max	h_2 max	t / T max	Q min	Q_0	q
	mm	mm	mm	mm	mm	mm	mm	mm	kN/LB	kN	kg/m
*M112F6–B–100	100.00	21.00									6.14
*M112F6–B–125	125.00	21.00	32.00	15.00	64.0	68.3	40.0	6.0	112.0/25200	123.20	5.46
M112F6–P–125	125.00	60.00									10.33
M112F7–P–125	125.00	30.00	32.00	15.00	64.00	68.30	40.0	6.0	112.0/25200	123.20	6.39
*M80F4–B–125	125.00	18.00	28.00	12.00	55.00	58.50	35.0	5.0	80.0/18000	88.00	3.85
*M80F8–B–125	125.00	18.00	28.00	12.00	55.00	58.50	35.0	5.0	80.0/18000	88.00	3.85
M112F8–S–100	100.00	30.00	31.00	15.00	63.50	68.00	40.0	6.0	112.0/25200	123.20	7.14
M160F1–P–100	100.00	36.00	36.00	18.00	76.00	80.00	40.0	7.0	160.0/36364	176.00	9.42
M56F21–P–100	100.00	42.00	24.00	12.00	54.70	59.50	30.0	6.0	56.0/12600	61.60	6.30
M80F12–P–100	100.00	50.00	28.00	12.00	55.00	58.50	35.0	5.0	80.0/18000	88.00	7.80
*M80F4–B–100	100.00	18.00	28.00	12.00	55.00	58.50	35.0	5.0	80.0/18000	88.00	4.13
*M112F15–B–100	100.00	21.00	31.00	15.00	64.50	69.00	40.0	6.0	112.0/25200	123.20	5.90
*M160F15–B–100	100.00	25.00	37.00	18.00	85.30	91.50	50.0	10.0	160.0/36364	176.00	12.51
*M160F14–B–100	100.00	25.00	37.00	18.00	77.30	83.50	50.0	8.0	160.0/36364	176.00	10.44
M224F3–P–160	160.00	80.00	30.00	21.00	81.00	–	60.0	8.0	224.0/50909	246.00	17.34
*M315F6–B–160	160.00	42.00	80.00	25.00	140.00	140.00	80.0	12.0	315.0/70862	346.50	27.30
*M112F14	160.00	21.00	31.00	14.00	64.40	69.00	40.0	6.0	112.0/25200	123.20	5.03
*M315F17–B–160	160.00	36.00	66.70	25.00	93.50	100.50	70.0	8.0	315.0/70862	346.50	15.04
M315F12–S–200	200.00	45.00	48.00	25.00	119.00	126.50	70.0	15.0	600.0/135000	648.00	24.20
M315F10–S–250	250.00	50.00	55.00	26.00	106.90	113.00	70.0	10.0	315.0/70862	393.70	17.60
M315F16–S–250	250.00	60.00	48.00	25.00	109.50	117.00	70.0	12.0	600.0/135000	648.00	21.60

*Bushing chain: d_1 in the table indicate the external diameter of the bushing.
**Buchsenketten: In dieser Tabelle zeigt d_1 den Außendurchmesser der Buchsen.*

Förderketten mit Befestigungslaschen (M Serie)
Conveyor chains with attachments (M series)
Chaînes de manutention avec pattes d'attache (Série M)

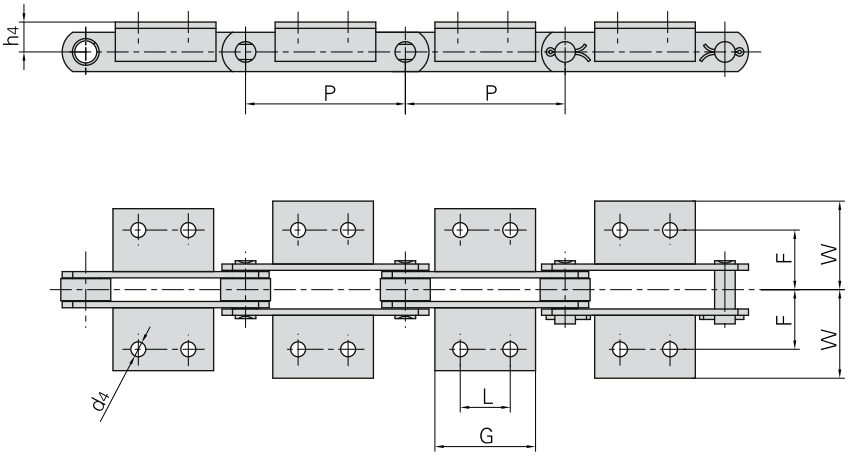

ISO Chain No. *ISO Ketten Nr.*	P	L	G	d4	F	W	h4
	mm	mm	mm	mm	mm	mm	mm
M20	40.0	△	14.0	6.6	27.0	40.0	16.0
	50.0	△	14.0				
	63.0	20.0	35.0				
	80.0	35.0	50.0				
M28	50.0	△	20.0	9.0	32.0	47.0	20.0
	63.0	△	20.0				
	80.0	25.0	45.0				
	100.0	40.0	60.0				
M40	63.0	△	31.0	9.0	35.0	50.0	25.0
	80.0	20.0	45.0				
	100.0	40.0	60.0				
	125.0	65.0	85.0				
M56	63.0	△	22.0	11.0	44.0	61.0	30.0
	80.0	△	30.0				
	100.0	25.0	50.0				
	125.0	50.0	75.0				
	160.0	85.0	110.0				
M80	80.0	△	30.0	11.0	48.0	65.0	35.0
	100.0	25.0	50.0				
	125.0	50.0	75.0				
	160.0	85.0	110.0				
	200.0	125.0	150.0				

△ Attachments with 1 hole
△ *Befestigungslaschen mit einem Loch*

Förderketten mit Befestigungslaschen (M Serie)
Conveyor chains with attachments (M series)
Chaînes de manutention avec pattes d'attache (Série M)

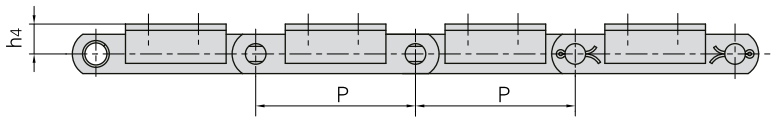

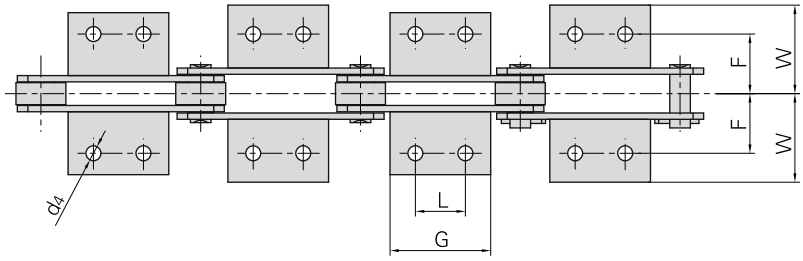

ISO Chain No. *ISO Ketten Nr.*	P	L	G	d4	F	W	h4
	mm	mm	mm	mm	mm	mm	mm
M112	80.0	△	28.0	14.0	55.0	80.0	40.0
	100.0	△	40.0				
	125.0	35.0	65.0				
	160.0	65.0	95.0				
	200.0	100.0	130.0				
M160	100.0	△	30.0	14.0	62.0	85.0	45.0
	125.0	25.0	50.0				
	160.0	50.0	80.0				
	200.0	85.0	115.0				
	250.0	145.0	175.0				
M224	125.0	△	35.0	18.0	70.0	110.0	55.0
	160.0	△	60.0				
	200.0	65.0	100.0				
	250.0	125.0	160.0				
	315.0	190.0	230.0				
M315	160.0	△	35.0	18.0	80.0	115.0	65.0
	200.0	50.0	85.0				
	250.0	100.0	140.0				
	315.0	155.0	190.0				
	400.0	155.0	205.0				

△Attachments with 1 hole
△*Befestigungslaschen mit einem Loch*

Förderketten mit Befestigungslaschen (M Serie)
Conveyor chains with attachments (M series)
Chaînes de manutention avec pattes d'attache (Série M)

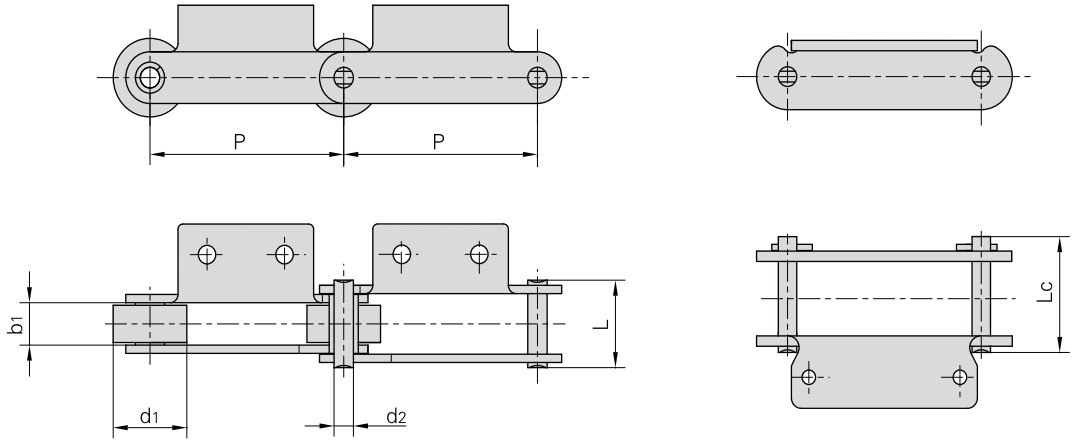

Donghua Chain No. *Donghua Ketten Nr.*	Pitch *Teilung*	Roller diameter *Rollen-durch-messer*	Width between inner plates *Innere Breite*	Pin diameter *Bolzen-durch-messer*	Pin length *Bolzen-länge*		Ultimate tensile strength *Min. Bruchkraft*	Average tensile strength *Durchschn. Bruchkraft*	Weight per meter *Gewicht*
	P	d_1 max	b_1 min	d_2 max	L max	Lc max	Q min	Q_0	q
	mm	mm	mm	mm	mm	mm	kN/LB	kN	kg/m
M18F1A1–P–50	50.0	25.0	11.5	5.72	26.0	28.2	18.0/4050	20.0	2.46
M18F2A1.02–P–50	50.0	25.0	11.5	5.72	28.0	30.2	18.0/4050	20.0	2.18
M18F4A1.02–S–50	50.0	15.0	12.0	6.00	24.0	26.5	18.0/4050	20.0	1.20
M28F3A2–P–63	63.0	30.0	17.0	7.00	37.3	40.3	35.0/7874	39.0	3.48
M28F1A2–P–80	80.0	29.4	18.0	7.00	35.4	38.7	28.0/6300	31.0	2.60
M28F3A2–F–100	100.0	30.0	17.0	7.00	37.3	40.3	35.0/7874	39.0	3.46
M32A1.02–P–50	50.0	31.0	15.0	10.00	33.0	35.5	32.0/7200	35.2	4.09
M32A1F1–P–50	50.0	31.0	15.0	10.00	33.0	35.5	32.0/7200	35.2	3.96
M35F4A1.01–C–69	69.0	25.0	12.0	7.00	27.5	30.0	35.0/7874	39.0	2.26
M40FA1.02–P–50	50.0	31.0	15.0	10.00	36.6	39.0	75.0/16872	82.5	4.52
M40FK2F1–P–50	50.0	31.0	15.0	10.00	36.6	39.0	40.0/9000	44.0	4.94
M40FA2–P–50	50.0	31.0	15.0	10.00	36.6	39.0	40.0/9000	44.0	4.54
M40FA1F1.02–P–50	50.0	31.0	15.0	10.00	36.6	39.0	40.0/9000	44.0	4.31
M40FA2F1.08–P–50	50.0	31.0	15.0	10.00	36.6	39.0	40.0/9000	44.0	4.08
M40F17A2–P–50.8	50.8	31.0	15.2	13.40	38.0	42.8	53.9/12127	59.2	4.90
M40F5A2–S–65	65.0	24.0	15.0	12.00	38.0	41.0	40.0/9000	44.0	4.74
M40F10–F–76.2	76.2	31.5	15.0	14.00	38.0	42.0	40.0/9000	44.0	4.16
M40F1–P–125	125.0	36.0	38.0	14.27	75.6	–	40.0/9091	44.0	10.18
M56F1–P–100	100.0	38.0	20.5	10.00	42.3	46.1	56.0/12727	61.0	4.63
M56F2–P–100	100.0	42.0	22.5	10.00	44.6	48.5	56.0/12727	61.0	5.67
M56F3–P–100	100.0	38.0	20.5	10.00	42.3	46.1	56.0/12727	61.0	4.72
M56F8–P–100	100.0	38.0	17.0	10.00	38.8	42.6	56.0/12727	61.0	3.79
M56F9–F1–100	100.0	38.0	20.5	10.00	46.3	50.1	88.2/19845	97.0	5.80
M56A2–P–125	125.0	42.0	24.0	10.00	46.0	49.5	56.0/12727	61.0	5.24
M75–P100	100.0	38.0	18.9	9.53	40.4	44.7	75.0/17045	83.0	4.85
M75–P100F1	100.0	38.0	18.9	9.53	38.4	42.7	75.0/17045	83.0	4.01

*Bushing chain: d_1 in the table indicate the external diameter of the bushing.
**Buchsenketten: In dieser Tabelle zeigt d_1 den Außendurchmesser der Buchsen.*

Förderketten mit Befestigungslaschen (M Serie)
Conveyor chains with attachments (M series)
Chaînes de manutention avec pattes d'attache (Série M)

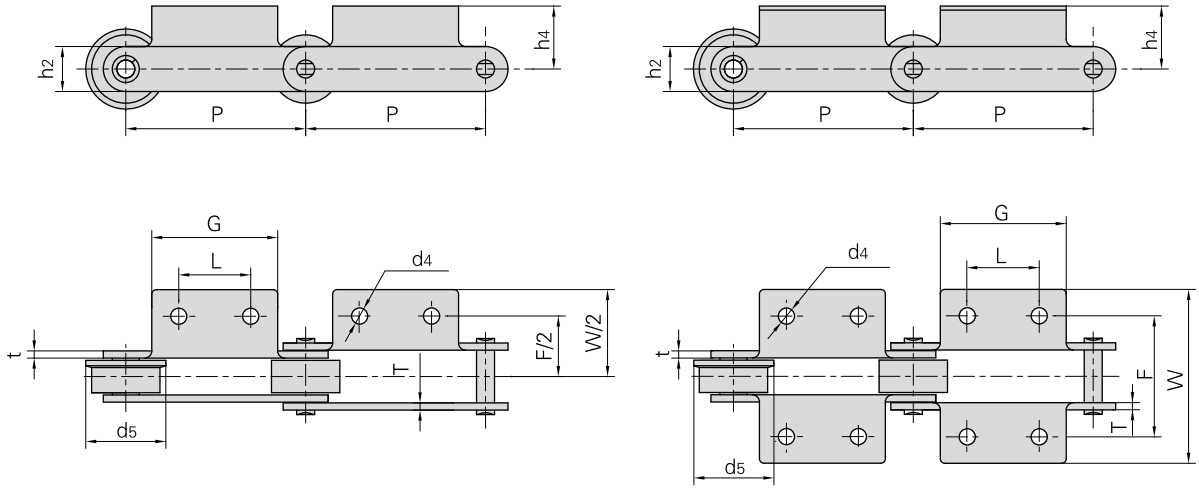

Donghua Chain No. *Donghua Ketten Nr.*	P	L	G	F	W	h_4	h_2	d_4	t/T	d_5
	mm	mm	mm	mm	mm	mm	mm	mm	mm	mm
M18F1A1–P–50	50.0	△	46.0	44.0	72.0	24.0	18.0	6.5	2.50	–
M18F2A1.02–P–50	50.0	△	41.0	48.0	68.0	25.0	15.0	6.5	3.00	–
M18F4A1.02–S–50	50.0	△	30.0	50.0	83.0	20.0	15.0	8.0	2.03	–
M28F3A2–P–63	63.0	20.0	50.0	64.0	92.0	20.0	20.0	9.0	4.00	–
M28F1A2–P–80	80.0	25.0	45.8	66.0	91.6	11.8	20.5	8.8	3.25	–
M28F3A2–F–100	100.0	40.0	76.0	64.0	100.0	20.0	20.0	9.0	4.00	40.0
M32A1.02–P–50	50.0	△	60.0	62.0	97.0	35.0	23.0	10.0	3.00	–
M32A1F1–P–50	50.0	△	30.0	62.0	92.0	28.0	23.0	10.0	3.00	–
M35F4A1.01–C–69	69.0	△	60.0	50.0	74.0	25.5	19.0	7.0	2.50	–
M40FA1.02–P–50	50.0	△	60.0	70.0	98.0	17.5	25.0	10.0	4.00	–
M40FK2F1–P–50	50.0	30.0	60.0	67.5	100.0	17.0	25.0	9.0	4.00	–
M40FA2–P–50	50.0	30.0	45.0	93.0	136.0	14.5	25.0	6.5	4.00	–
M40FA1F1.02–P–50	50.0	△	35.0	54.0	104.0	20.5	25.0	10.5	4.00	–
M40FA2F1.08–P–50	50.0	25.0	45.0	90.0	122.0	22.0	25.0	8.5	4.00	–
M40F17A2–P–50.8	50.8	30.0	55.0	66.0	92.0	18.0	25.0	10.2	5.00/4.00	–
M40F5A2–S–65	65.0	25.0	45.0	90.0	122.0	24.5	30.0	8.5	4.00	–
M40F10–F–76.2	76.2	22.2	38.3	76.2	106.5	19.0	26.0	9.4	4.00	40.0
M40F1–P–125	125.0	50.0	90.0	100.0	140.0	36.0	50.0	13.0	6.00	–
M56F1–P–100	100.0	40.0	70.0	67.5	96.6	35.0	25.0	9.0	4.00	–
M56F2–P–100	100.0	29.7	50.0	124.0	148.0	21.5	32.0	7.0	4.00	–
M56F3–P–100	100.0	50.0	70.0	71.0	101.0	35.0	25.0	9.0	4.00	–
M56F8–P–100	100.0	△	70.0	63.8	95.0	25.0	25.0	8.2	4.00	–
M56F9–F1–100	100.0	40.0	70.0	68.0	96.6	25.0	32.0	9.0	5.00	45.0
M56A2–P–125	125.0	50.0	75.0	88.0	128.0	30.0	30.0	11.0	4.00	–
M75–P100	100.0	40.0	70.0	64.0	112.0	24.9	26.0	9.0	4.00	–
M75–P100F1	100.0	40.0	70.0	64.0	112.0	24.4	26.0	9.0	3.50	–

△ Attachments with 1 hole
△ *Befestigungslaschen mit einem Loch*

Förderketten mit Befestigungslaschen (M Serie)
Conveyor chains with attachments (M series)
Chaînes de manutention avec pattes d'attache (Série M)

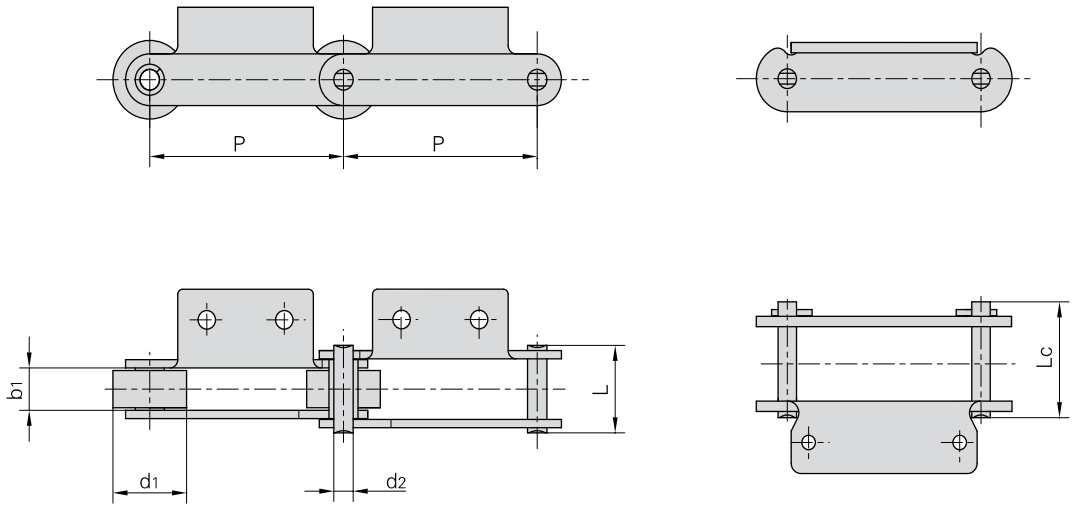

Donghua Chain No. *Donghua Ketten Nr.*	Pitch *Teilung*	Roller diameter *Rollen-durchmesser*	Width between inner plates *Innere Breite*	Pin diameter *Bolzen-durchmesser*	Pin length *Bolzen-länge*		Ultimate tensile strength *Min. Bruchkraft*	Average tensile strength *Durchschn. Bruchkraft*	Weight per meter *Gewicht*
	P	d_1 max	b_1 min	d_2 max	L max	Lc max	Q min	Q_0	q
	mm	mm	mm	mm	mm	mm	kN/LB	kN	kg/m
M75–P100F3	100.0	28.5	23.9	11.10	46.3	50.3	75.0/17045	83.0	4.53
M75F4–P–100	100.0	38.0	18.9	9.53	40.4	44.7	75.0/17045	83.0	4.62
M75–PF1–100	100.0	19.1	18.9	9.53	40.4	44.7	75.0/16872	75.0	3.43
M80K1F1–P–100	100.0	50.0	28.0	12.00	55.0	58.5	80.0/18000	88.0	9.10
*M80K2F1–B–100	100.0	18.0	28.0	12.00	55.0	58.5	80.0/18000	88.0	5.94
*M80F5K1–B–100	100.0	18.0	28.0	12.0	55.0	58.5	80.0/18000	88.0	5.45
M80A2F1–F–160	160.0	50.0	29.0	12.0	65.0	–	80.0/18000	88.0	7.45
M112F5K2–P–100	100.0	36.0	37.0	16.0	69.0	74.0	112.0/25200	123.2	8.28
*M112K2F2–B–100	100.0	21.0	32.0	15.0	64.5	69.0	112.0/25200	123.2	7.53
M112F16K1–P–125	125.0	60.0	32.0	15.0	68.5	73.0	112.0/25200	123.2	13.00
M112K2F1–S–125	125.0	30.0	32.0	16.0	64.5	69.0	112.0/25200	123.2	7.35
M112F9A2–F–180	180.0	50.0	32.0	15.0	64.5	69.0	160.0/35993	176.0	10.30
M112F3–F–200	200.0	60.0	37.0	16.0	69.0	74.0	112.0/25200	123.2	11.00
M160F1K2–P–100	100.0	36.0	36.0	18.0	76.0	80.0	160.0/35993	176.0	10.80
*M160F1K2.03–B–100	100.0	18.0	36.0	18.0	76.0	80.0	160.0/35993	176.0	9.73
M160F12K2–S–100	100.0	36.0	38.0	14.0	76.0	–	100.0/22496	110.0	9.33
*M160F2–B–100	100.0	25.0	37.0	18.0	73.3	83.0	222.0/49940	244.2	11.36
M160F3K1F1–P–101.6	101.6	66.7	26.0	26.9	58.0	78.5	156.0/35093	171.6	17.37
M160A2F7–F–200	200.0	70.0	37.0	18.0	85.0	–	181.8/40905	200.0	15.20
M160K2F2–S–200	200.0	36.0	36.0	18.0	76.0	80.0	160.0/36364	176.0	11.40
M160A2F8–F–200	200.0	70.0	37.0	18.0	85.0	–	181.8/40905	200.0	15.20
M224F6A2–P–160	160.0	85.0	42.0	21.0	87.5	92.5	224.0/51982	246.5	27.56
M224F1K2–P–200	200.0	85.0	42.0	21.0	95.0	–	224.0/50909	246.0	21.20

Förderketten mit Befestigungslaschen (M Serie)
Conveyor chains with attachments (M series)
Chaînes de manutention avec pattes d'attache (Série M)

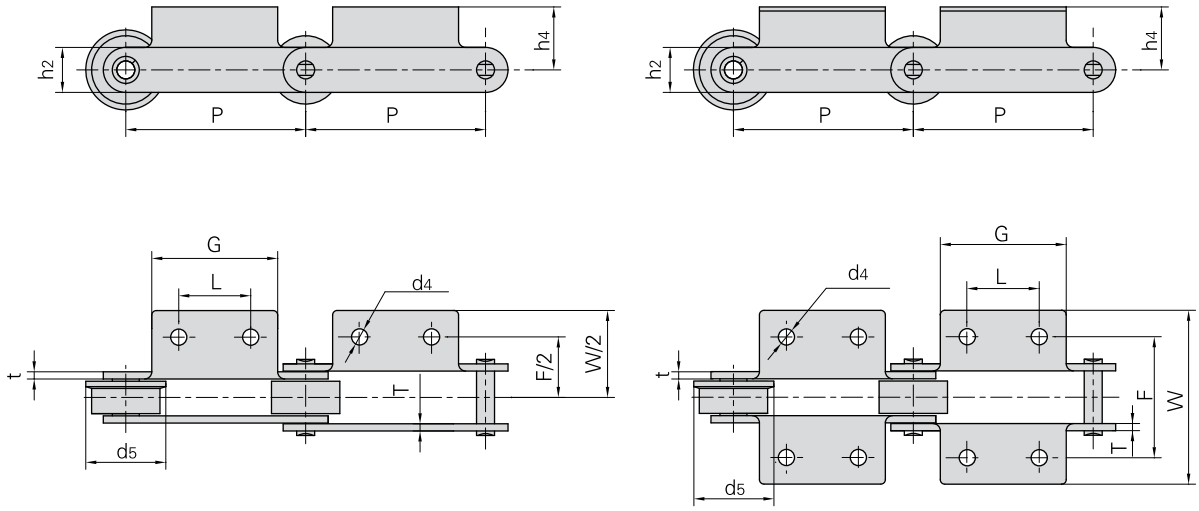

Donghua Chain No. *Donghua Ketten Nr.*	P	L_1	G	F	W	h_4	h_2	d_4	t/T	d_5
	mm	mm	mm	mm	mm	mm	mm	mm	mm	mm
M75–P100F3	100.0	50.0	70.0	75.7	96.7	35.0	26.0	9.7	4.0	–
M75F4–P–100	100.0	40.0	70.0	90.0	112.4	24.9	26.0	8.5	4.0	–
M75–PF1–100	100.0	40.0	70.0	64.0	112.0	24.9	26.0	9.0	4.0	–
M80K1F1–P–100	100.0	△	30.0	96.0	138.0	35.0	35.0	11.0	5.0	–
M80K2F1–B–100	100.0	70.0	100.0	96.0	130.0	35.0	35.0	11.0	5.0	–
*M80F5K1–B–100	100.0	△	60.0	100.0	156.0	23.2	35.0	13.0 × 17.0	5.0	–
M80A2F1–F–160	160.0	60.0	95.0	94.0	124.0	27.5	35.0	9.0	5.0	60.0
M112F5K2–P–100	100.0	35.0	65.0	98.5	140.0	40.0	40.0	14.0	6.0	–
*M112K2F2–B–100	100.0	30.0	60.0	100.0	130.0	30.0	40.0	9.0	6.0	–
M112F16K1–P–125	125.0	△	72.0	120.0	184.0	39.0	40.0	13.0	7.0	–
M112K2F1–S–125	125.0	80.0	110.0	85.8	115.8	35.0	40.0	13.0	6.0	–
M112F9A2–F–180	180.0	100.0	130.0	110.0	160.0	40.0	40.0	14.0	6.0	60.0
M112F3–F–200	200.0	90.0	120.0	102.0	137.5	40.0	45.0	11.0	6.0	75.0
M160F1K2–P–100	100.0	40.0	80.0	124.0	183.0	35.0	40.0	14.0	7.0	–
*M160F1K2.03–B–100	100.0	40.0	80.0	124.0	283.0	35.0	40.0	14.0	7.0	–
M160F12K2–S–100	100.0	30.0	70.0	100.0	120.0	35.0	40.0	13.0	5.6	–
*M160F2–B–100	100.0	△	110.0	125.0	155.0	45.0	50.0	17.0	7.0	–
M160F3K1F1–P–101.6	101.6	△	56.0	175.0	204.0	38.0	51.0	11.0	7.1/5.1	–
M160A2F7–F–200	200.0	85.0	115.0	124.0	170.0	45.0	51.0	14.0	7.0	85.0
M160K2F2–S–200	200.0	100.0	180.0	103.0	133.0	45.0	51.0	9.0	7.0	–
M160A2F8–F–200	200.0	80.0	115.0	124.0	170.0	45.0	51.0	12.0	7.0	85.0
M224F6A2–P–160	160.0	80.0	125.0	136.0	182.0	62.0	72.0	17.0	8.0	–
M224F1K2–P–200	200.0	80.0	120.0	128.0	168.0	40.0	50.0	14.0	9.0	–

△ Attachments with 1 hole
△ *Befestigungslaschen mit einem Loch*

Förderketten (MT Serie)
Conveyor chains (MT series)
Chaînes de manutention (Série MT)

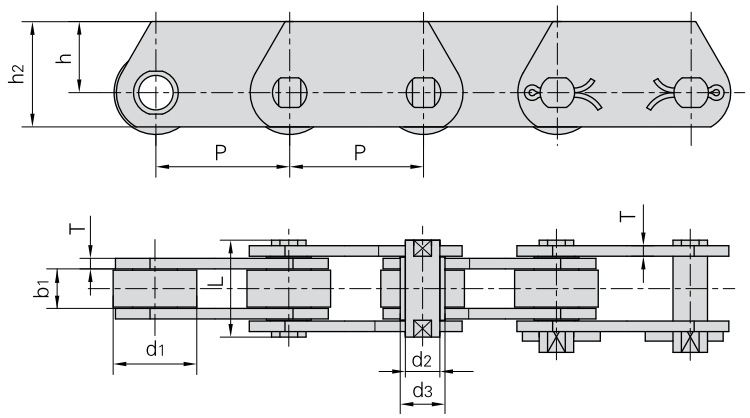

DIN Chain No. *DIN Ketten Nr.*	Pitch *Teilung* P mm					Roller diameter *Rollen-durchmesser* d_1 max mm	Pin diameter *Bolzen-durchmesser* d_2 max mm	Bush diameter *Buchsen-durchmesser* d_3 max mm	Plate thickness *Laschen-dicke* T max mm
MT20	40.0	50.0	63.0	80.0	100.0	25.0	6.0	9.0	2.5
MT28	50.0	63.0	80.0	100.0	125.0	30.0	7.0	10.0	3.0
MT40	63.0	80.0	100.0	125.0	160.0	36.0	8.5	12.5	3.5
MT56	63.0	80.0	100.0	125.0	160.0	42.0	10.0	15.0	4.0
MT80	80.0	100.0	125.0	160.0	200.0	50.0	12.0	18.0	5.0
MT112	80.0	100.0	125.0	160.0	200.0	60.0	15.0	21.0	6.0
MT160	100.0	125.0	160.0	200.0	250.0	70.0	18.0	25.0	7.0
MT224	125.0	160.0	200.0	250.0	315.0	85.0	21.0	30.0	8.0
MT315	160.0	200.0	250.0	315.0	400.0	100.0	25.0	36.0	10.0
MT450	200.0	250.0	315.0	400.0	500.0	120.0	30.0	42.0	12.0

DIN Chain No. *DIN Ketten Nr.*	Width between inner plates *Innere Breite* b_1 min mm	Pin length *Bolzen-länge* L max mm	Plate depth *Laschen-höhe* h_2 max mm	h max mm	Ultimate tensile strength *Min. Bruchkraft* Q min kN/LB	*Q min kN/LB
MT20	16.0	35.0	25.0	16.0	20.0/4545	32.0/7270
MT28	18.0	40.0	30.0	20.0	28.0/6364	42.0/9545
MT40	20.0	45.0	35.0	22.5	40.0/9091	60.0/13635
MT56	24.0	52.0	45.0	30.0	56.0/12727	85.0/19318
MT80	28.0	62.0	50.0	32.5	80.0/18182	125.0/28408
MT112	32.0	73.0	60.0	40.0	112.0/25454	175.0/39768
MT160	37.0	85.0	70.0	45.0	160.0/36364	260.0/59090
MT224	43.0	98.0	90.0	60.0	224.0/50909	340.0/77272
MT315	48.0	112.0	100.0	65.0	315.0/71591	520.0/118180
MT450	56.0	135.0	120.0	80.0	450.0/102272	700.0/159089

*Q: Higher breaking load with hardened plates
*Q: *höhere Bruchkraft durch gehärtete Laschen*

Förderketten mit Hohlbolzen (MC Serie)
Hollow pin conveyor chains (MC series)
Chaînes de manutention avec axes creux (Série MC)

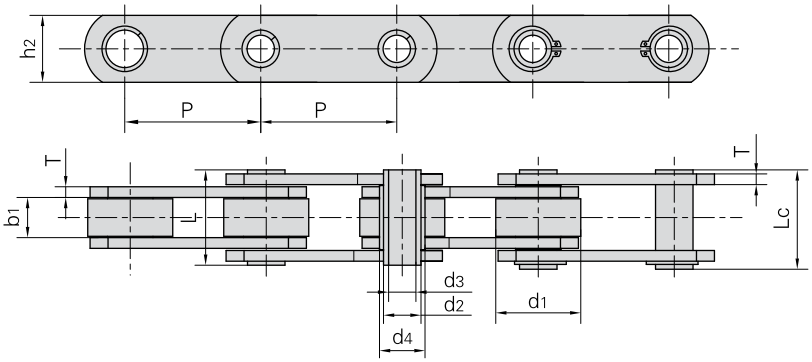

without rollers
ohne Rollen

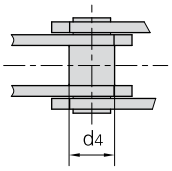

with A small rollers type
mit A-Schonrollen

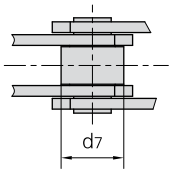

with B large rollers type
mit B-Laufrollen

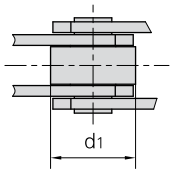

with D flanged rollers type
mit D-Bundlaufrollen

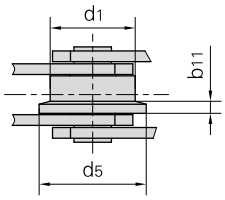

DIN Chain No. *DIN Ketten Nr.*	Pitch *Teilung* P mm						Roller dimesion *Rollen-abmessungen* d_1 max mm	d_7 max mm	d_5 max mm	b_{11} mm	Bush diameter *Buchsen-durchmesser* d_4 max mm	Plate depth *Laschen-höhe* h_2 max mm
MC28	63.0	80.0	100.0	125.0	160.0	–	36.0	25.0	45.0	4.5	17.5	25.0
MC56	80.0	100.0	125.0	160.0	200.0	250.0	50.0	30.0	60.0	5.0	21.0	35.0
MC112	100.0	125.0	160.0	200.0	250.0	315.0	70.0	42.0	85.0	7.0	29.0	50.0
MC224	160.0	200.0	250.0	315.0	400.0	500.0	100.0	60.0	120.0	10.0	41.0	70.0

DIN Chain No. *DIN Ketten Nr.*	Width between inner plates *Innere Breite* b_1 min mm	Pin diameter *Bolzen-durchmesser* d_2 max mm	d_3 min mm	Pin length *Bolzen-länge* L max mm	Lc max mm	Plate thickness *Laschen-dicke* T max mm	Breaking load *Bruchkraft* Q min kN/LB	*Q min kN/LB
MC28	20.0	13.0	8.2	36.0	38.5	3.5	28.0/6364	40.0/9091
MC56	24.0	15.5	10.2	45.0	47.5	4.0	56.0/12727	90.0/20454
MC112	32.0	22.0	14.3	62.5	64.3	6.0	112.0/25454	180.0/40908
MC224	43.0	31.0	20.3	83.0	85.5	8.0	224.0/50909	350.0/79544

*Q: Higher breaking load with hardened plates
*Q: *höhere Bruchkraft durch gehärtete Laschen*

Förderketten (FV Serie)
Conveyor chains (FV series)
Chaînes de manutention (Série FV)

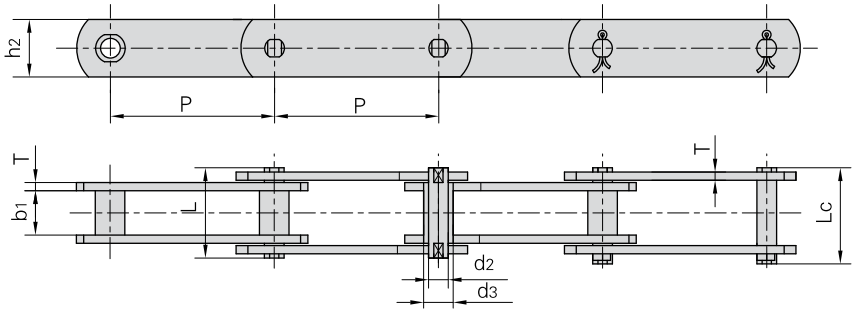

without rollers
ohne Rollen

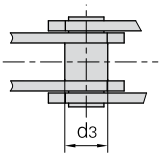

with A small rollers type
mit A-Schonrollen

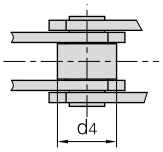

with B large rollers type
mit B-Laufrollen

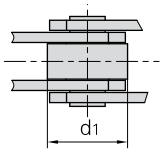

with D flanged rollers type
mit D-Bundlaufrollen

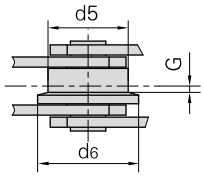

DIN Chain No. *DIN Ketten Nr.*	Pitch *Teilung* P mm							Roller dimesion *Rollen-abmessungen*					Bush diameter *Buchsen-durch-messer*
								d_1 max	d_4 max	d_5 max	d_6 max	G	d_3 max
								mm	mm	mm	mm	mm	mm
FV40	50.0	63.0	80.0	100.0	125.0	–	–	32.0	20.0	40.0	50.0	4.0	15.0
FV63	63.0	80.0	100.0	125.0	160.0	–	–	40.0	26.0	50.0	63.0	5.0	18.0
FV90	63.0	80.0	100.0	125.0	160.0	200.0	250.0	48.0	30.0	63.0	78.0	6.5	20.0
FV112	100.0	125.0	160.0	200.0	250.0	–	–	55.0	32.0	72.0	90.0	7.5	22.0
FV140	100.0	125.0	160.0	200.0	250.0	–	–	60.0	36.0	80.0	100.0	9.0	26.0
FV180	125.0	160.0	200.0	250.0	315.0	–	–	70.0	42.0	100.0	125.0	13.0	30.0
FV250	160.0	200.0	250.0	315.0	400.0	–	–	80.0	50.0	125.0	155.0	15.0	36.0
FV315	160.0	200.0	250.0	315.0	400.0	–	–	90.0	60.0	140.0	175.0	18.0	42.0

DIN Chain No. *DIN Ketten Nr.*	Width between inner plates *Innere Breite*	Pin diameter *Bolzen-durchmesser*	Pin length *Bolzen-länge*		Plate depth *Laschen-höhe*	Plate thickness *Laschen-dicke*	Ultimate tensile strength *Min. Bruchkraft*	
	b_1 min	d_2 max	L min	Lc max	h_2 max	T max	Q min	*Q min
	mm	mm	mm	mm	mm	mm	kN/LB	kN/LB
FV40	18.0	10.0	36.0	39.0	25.0	3.0	40.0/9091	47.0/10681
FV63	22.0	12.0	45.0	48.5	30.0	4.0	63.0/14317	75.0/17045
FV90	25.0	14.0	53.0	56.5	35.0	5.0	90.0/20453	115.0/26136
FV112	30.0	16.0	62.0	66.0	40.0	6.0	112.0/25452	170.0/38636
FV140	35.0	18.0	67.0	71.5	45.0	6.0	140.0/31815	180.0/40908
FV180	45.0	20.0	86.0	92.0	50.0	8.0	180.0/40908	250.0/56817
FV250	55.0	26.0	97.0	103.5	60.0	8.0	250.0/56817	300.0/68181
FV315	65.0	30.0	113.0	126.5	70.0	10.0	315.0/71591	480.0/109089

*Q: Higher breaking load with hardened plates
*Q: *höhere Bruchkraft durch gehärtete Laschen*

Förderketten mit Befestigungslaschen (FV Serie)
Conveyor chains with attachments (FV series)
Chaînes de manutention avec pattes d'attache (Série FV)

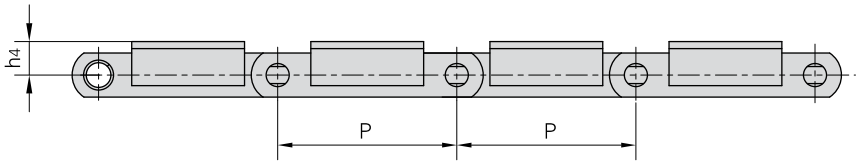

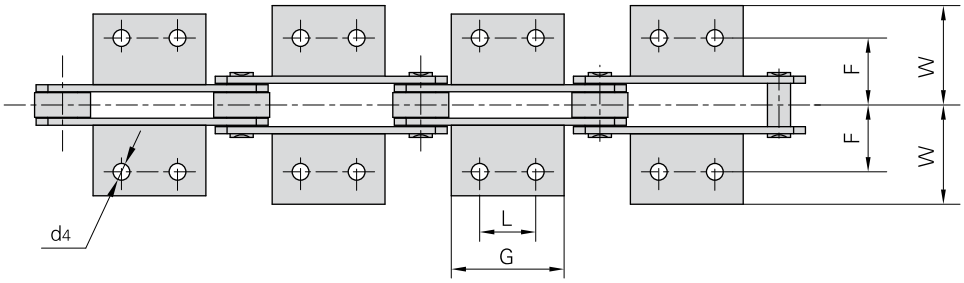

DIN Chain No. *DIN Ketten Nr.*	P	L	G	d4	F	W	h4
	mm	mm	mm	mm	mm	mm	mm
FV40	50.0	△	45.0	6.5	25.0	40.5	20.0
	63.0	△	31.0				
	80.0	25.0	45.0				
	100.0	30.0	50.0				
	125.0	30.0	60.0				
FV63	63.0	△	40.0	8.4	34.0	50.0	30.0
	80.0	25.0	45.0				
	100.0	30.0	50.0				
	125.0	40.0	60.0				
	160.0	50.0	70.0				
FV90	63.0	△	30.0	8.4	40.0	64.0	35.0
	80.0	25.0	45.0				
	100.0	30.0	50.0				
	125.0	40.0	60.0				
	160.0	50.0	70.0				
	200.0	60.0	80.0				
	250.0	65.0	85.0				
FV112	100.0	30.0	50.0	11.0	50.0	70.0	40.0
	125.0	40.0	65.0				
	160.0	50.0	75.0				
	200.0	65.0	90.0				
	250.0	80.0	105.0				

△ Attachments with 1 hole
△ *Befestigungslaschen mit einem Loch*

Förderketten mit Befestigungslaschen (FV Serie)
Conveyor chains with attachments (FV series)
Chaînes de manutention avec pattes d'attache (Série FV)

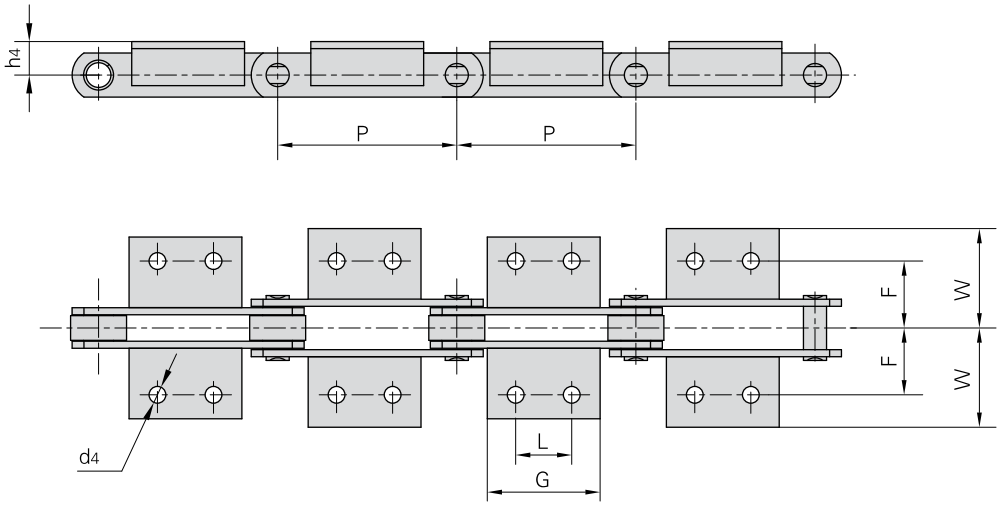

DIN Chain No. *DIN Ketten Nr.*	P	L	G	d4	F	W	h4
	mm	mm	mm	mm	mm	mm	mm
FV140	100.0	30.0	55.0	11.0	50.0	81.0	45.0
	125.0	40.0	65.0				
	160.0	50.0	75.0				
	200.0	65.0	90.0				
	250.0	80.0	105.0				
FV180	125.0	35.0	63.0	13.0	64.0	91.0	45.0
	160.0	50.0	80.0				
	200.0	65.0	95.0				
	250.0	80.0	110.0				
	315.0	100.0	130.0				
FV250	160.0	50.0	80.0	14.0	69.0	106.0	55.0
	200.0	65.0	95.0				
	250.0	80.0	110.0				
	315.0	100.0	130.0				
	400.0	100.0	130.0				
FV315	160.0	△	50.0	14.0	85.0	130.0	60.0
	200.0	65.0	95.0				
	250.0	80.0	110.0				
	315.0	100.0	130.0				
	400.0	100.0	130.0				

△ Attachments with 1 hole
△ *Befestigungslaschen mit einem Loch*

Förderketten mit Befestigungslaschen (FV Serie)
Conveyor chains with attachments (FV series)
Chaînes de manutention avec pattes d'attache (Série FV)

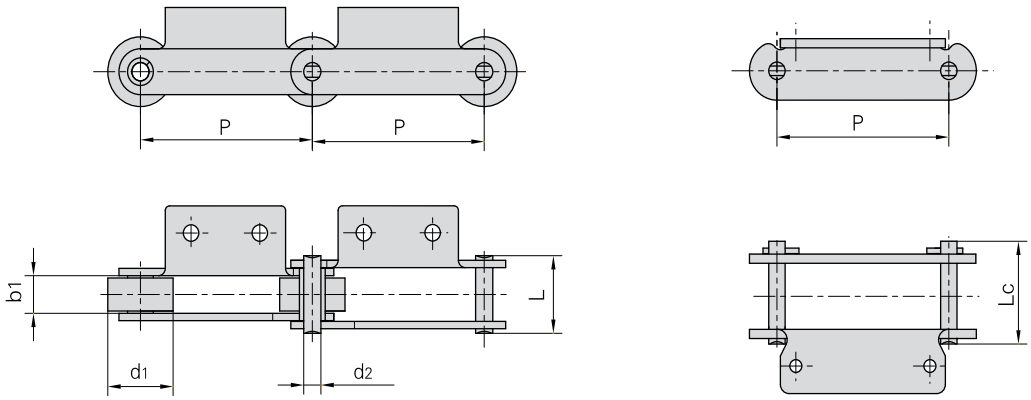

Donghua Chain No. *Donghua Ketten Nr.*	Pitch *Teilung*	Roller diameter *Rollen-durchmesser*	Width between inner plates *Innere Breite*	Pin diameter *Bolzen-durchmesser*	Pin length *Bolzen-länge*		Ultimate tensile strength *Min. Bruchkraft*	Average tensile strength *Durchschn. Bruchkraft*	Weight per meter *Gewicht*
	P	d_1 max	b_1 min	d_2 max	L max	Lc max	Q min	Q_0	q
	mm	mm	mm	mm	mm	mm	kN/LB	kN	kg/m
FV90A2F1–P–85	85.00	50.00	25.00	14.00	52.0	56.5	90.0/20250	100.0	10.15
FV90A2F1–P–100	100.00	50.00	25.00	14.00	52.0	56.5	90.0/20250	100.0	8.74
FV112F1A1–P–100	100.00	55.00	30.00	16.00	71.0	76.5	180.0/40492	200.0	14.30
FV112F1A1–P–80	80.00	55.00	30.00	16.00	71.0	76.5	180.0/40492	200.0	16.60

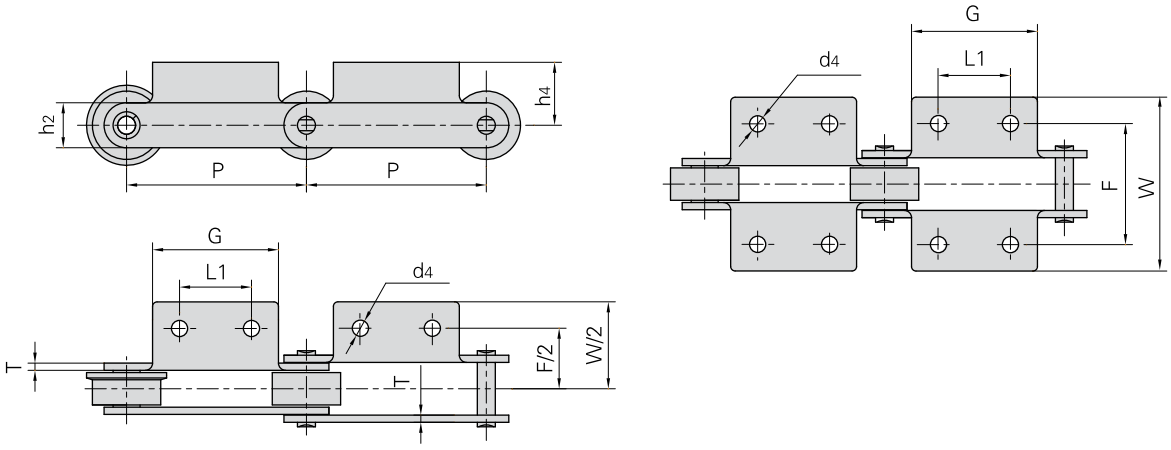

Donghua Chain No. *Donghua Ketten Nr.*	P	L_1	G	F	W	h_4	h_2	d_4	T
	mm	mm	mm	mm	mm	mm	mm	mm	mm
FV90A2F1–P–85	85.00	40.00	60.00	80.0	109.2	40.0	35.0	9.5	5.00
FV90A2F1–P–100	100.00	40.00	60.00	80.0	109.2	40.0	35.0	9.5	5.00
FV112F1A1–P–100	100.00	△	50.00	120.0	164.0	50.0	40.0	15.0	8.00
FV112F1A1–P–80	80.00	△	50.00	120.0	164.0	50.0	40.0	15.0	8.00

△ Attachments with 1 hole
△ *Befestigungslaschen mit einem Loch*

Förderketten (FVT Serie)
Conveyor chains (FVT series)
Chaînes de manutention (Série FVT)

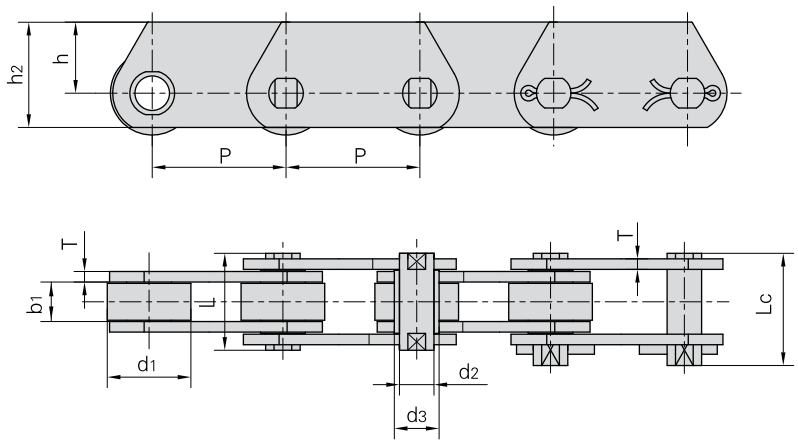

DIN Chain No. *DIN Ketten Nr.*	Pitch *Teilung* P mm							Roller diameter *Rollen-durchmesser* d_1 max mm	Pin diameter *Bolzen-durchmesser* d_2 max mm	Bush diameter *Buchsen-durchmesser* d_3 max mm	Plate thickness *Laschen-dicke* T max mm
FVT40	50.0	63.0	80.0	100.0	125.0	–	–	32.0	10.0	15.0	3.0
FVT63	63.0	80.0	100.0	125.0	160.0	–	–	40.0	12.0	18.0	4.0
FVT90	63.0	80.0	100.0	125.0	160.0	200.0	250.0	48.0	14.0	20.0	5.0
FVT112	100.0	125.0	160.0	200.0	250.0	–	–	55.0	16.0	22.0	6.0
FVT140	100.0	125.0	160.0	200.0	250.0	–	–	60.0	18.0	25.0	6.0
FVT180	125.0	160.0	200.0	250.0	315.0	–	–	70.0	20.0	30.0	8.0
FVT250	160.0	200.0	250.0	315.0	–	–	–	80.0	26.0	36.0	8.0
FVT315	160.0	200.0	250.0	315.0	400.0	–	–	90.0	30.0	42.0	10.0

DIN Chain No. *DIN Ketten Nr.*	Width between inner plates *Innere Breite* b_1 min mm	Pin length *Bolzen-länge* L max mm	Lc max mm	Plate depth *Laschen-höhe* h_2 max mm	h max mm	Ultimate tensile strength *Min. Bruchkraft* Q min kN/LB	*Q min kN/LB
FVT40	18.0	36.0	39.0	35.0	22.5	40.0/9091	47.0/10681
FVT63	22.0	45.0	48.5	40.0	25.0	63.0/14317	75.0/17045
FVT90	25.0	53.0	56.5	45.0	27.5	90.0/20453	115.0/26136
FVT112	30.0	62.0	66.0	50.0	30.0	112.0/25452	170.0/38636
FVT140	35.0	67.0	71.5	60.0	37.5	140.0/31815	180.0/40908
FVT180	45.0	86.0	92.0	70.0	45.0	180.0/40908	250.0/56817
FVT250	55.0	97.0	103.5	80.0	50.0	250.0/56817	300.0/68181
FVT315	65.0	113.0	126.5	90.0	55.0	315.0/71591	480.0/109089

*Q: Higher breaking load with hardened plates
*Q: *höhere Bruchkraft durch gehärtete Laschen*

Förderketten mit Hohlbolzen (FVC Serie)
Hollow pin conveyor chains (FVC series)
Chaînes de manutention avec axes creux (Série FVC)

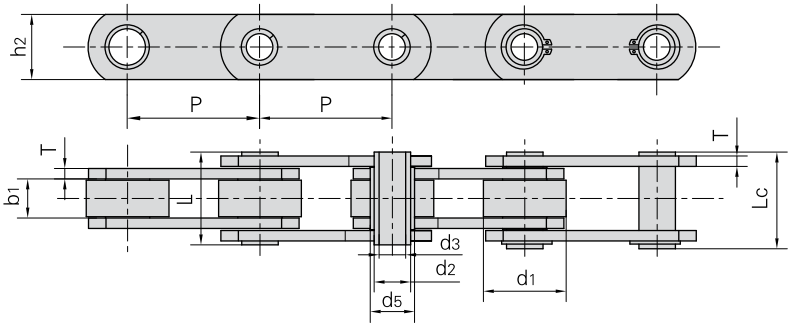

without rollers
ohne Rollen

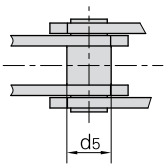

with S small rollers type
mit S-Schonrollen

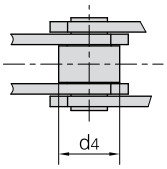

with P large rollers type
mit P-Laufrollen

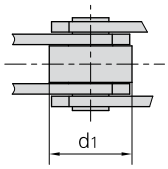

with F flanged rollers type
mit F-Bundlaufrollen

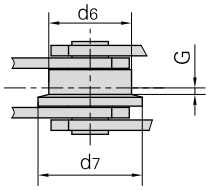

DIN Chain No. *DIN Ketten Nr.*	Pitch *Teilung* P							Roller dimension *Rollenabmessungen*				
								d_1 max	d_4 max	d_6 max	d_7 max	G
	mm	mm	mm	mm	mm	mm	mm	mm	mm	mm	mm	mm
FVC63	63.0	80.0	100.0	125.0	160.0	–	–	40.0	26.0	50.0	63.0	5.0
FVC90	63.0	80.0	100.0	125.0	160.0	200.0	250.0	48.0	30.0	63.0	78.0	6.5
FVC112	100.0	125.0	160.0	200.0	250.0	–	–	55.0	32.0	72.0	90.0	7.5
FVC140	100.0	125.0	160.0	200.0	250.0	–	–	60.0	36.0	80.0	100.0	9.0
FVC180	125.0	160.0	200.0	250.0	315.0	–	–	70.0	42.0	100.0	125.0	13.0
FVC250	160.0	200.0	250.0	315.0	400.0	–	–	80.0	50.0	125.0	155.0	15.0
FVC315	160.0	200.0	250.0	315.0	400.0	–	–	90.0	60.0	140.0	175.0	18.0

DIN Chain No. *DIN Ketten Nr.*	Width between inner plates *Innere Breite*	Pin diameter *Bolzen-durchmesser*		Bush diameter *Buchsen-durchmesser*	Pin length *Bolzen-länge*		Plate thickness *Laschen-dicke*	Plate depth *Laschen-höhe*	Ultimate tensile strength *Min. Bruchkraft*
	b_1 min	d_2 max	d_3 min	d_5 max	L max	Lc max	T max	h_2 max	Q min
	mm	mm	mm	mm	mm	mm	mm	mm	kN/LB
FVC63	22.0	12.0	8.0	18.0	45.0	50.5	4.0	30.0	46.0/10454
FVC90	25.0	14.0	10.0	20.0	53.0	56.5	5.0	35.0	73.0/16590
FVC112	30.0	16.0	11.0	22.0	62.0	63.0	6.0	40.0	90.0/20454
FVC140	35.0	18.0	12.0	26.0	67.0	68.5	6.0	45.0	110.0/25000
FVC180	45.0	20.0	14.0	30.0	86.0	88.0	8.0	50.0	145.0/32954
FVC250	55.0	26.0	18.0	36.0	97.0	103.5	8.0	60.0	215.0/48863
FVC315	65.0	30.0	20.0	42.0	117.0	121.5	10.0	70.0	295.0/67044

Nicht-Standard Förderketten mit Hohlbolzen
Non-standard hollow pin conveyor chains
Chaînes de manutention non standard, avec axes creux

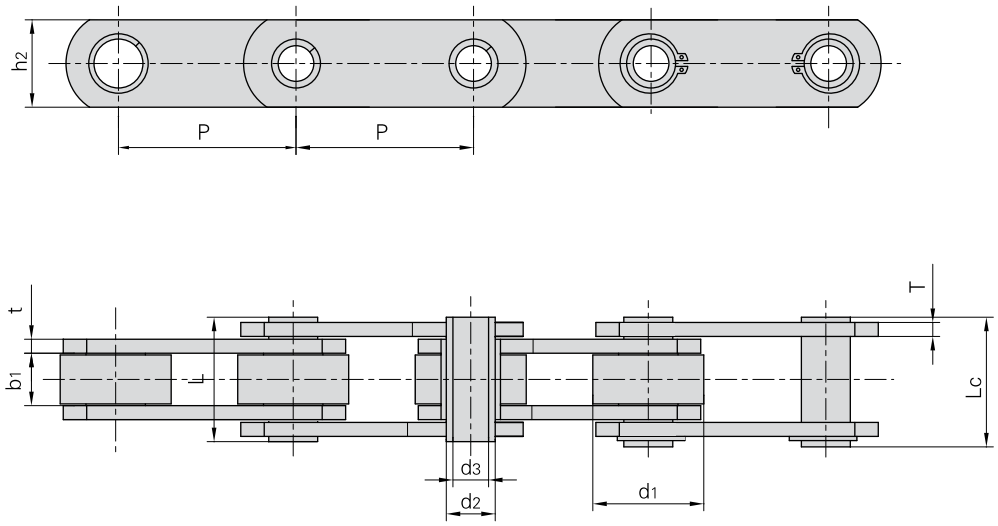

Donghua Chain No. *Donghua Ketten Nr.*	Pitch *Teilung*	Roller diameter *Rollen-durch-messer*	Width between inner plates *Innere Breite*	Pin diameter *Bolzen-durchmesser*		Pin length *Bolzen-länge*		Inner plate depth *Laschen-höhe*	Plate thickness *Laschen-dicke*	Ultimate tensile strength *Min. Bruchkraft*	Average tensile strength *Durchschn. Bruchkraft*	Weight per meter *Gewicht*
	P	d_1 max	b_1 min	d_2 max	d_3 min	L max	L_c max	h_2 max	t/T max	Q min	Q_0	q
	mm	mm	mm	mm	mm	mm	mm	mm	mm	kN/LB	kN	kg/m
MC56F1–S–80	80.00	30.00	24.00	16.00	10.20	45.5	47.0	35.0	4.0	56.0/12600	62.0	4.64
MC56F2–P–100	100.00	50.00	23.00	16.00	10.20	45.5	47.0	35.0	4.0	56.0/12600	62.0	6.27
MC112F1–P–100	100.00	70.00	32.00	22.00	16.30	67.0	68.5	50.0	6.0	112.0/25195	123.2	14.91
MC150F2–P–110	110.00	66.70	25.40	26.90	20.20	58.0	60.5	51.0	7.1/5.1	106.7/24003	118.0	13.50
FVC63F1–B–40	40.00	18.00	22.00	12.00	8.20	47.5	49.0	35.0	5.0	46.0/10348	51.0	5.34
FVC63F2–B–50	50.00	17.00	22.00	12.00	8.20	41.0	42.0	25.0	3.0	30.0/6750	33.0	2.24
FVC63F3–P–63	63.00	40.00	22.00	11.70	8.10	44.0	46.0	30.0	4.0	46.0/10348	51.0	5.83
FVC90F1–P–63	63.00	42.00	25.00	14.00	10.20	52.0	53.5	35.0	5.0	73.0/16422	80.0	5.33
FVC140F1–B–80	80.00	26.00	35.00	18.00	12.50	65.0	67.0	46.0	6.0	110.0/24745	120.0	7.80

Förderketten (Z Serie)
Conveyor chains (Z series)
Chaînes de manutention (Série Z)

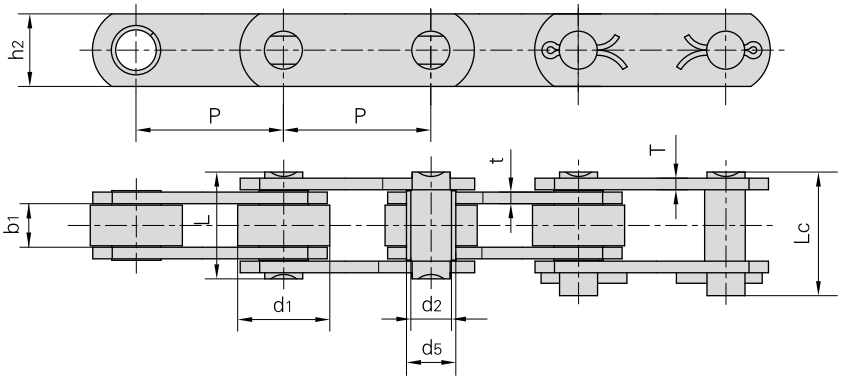

without rollers.
ohne Rollen

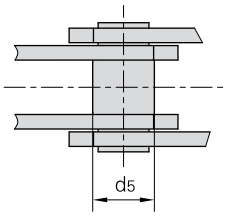

with B large rollers type
mit B-Laufrollen

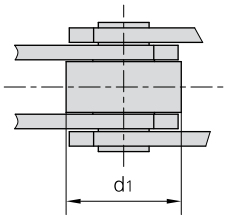

with D flanged rollers type
mit D-Bundlaufrollen

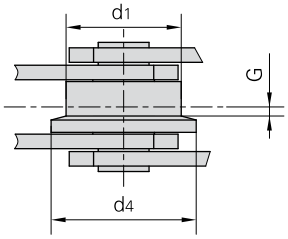

Donghua Chain No. *Donghua Ketten Nr.*	Pitch *Teilung* P							Roller dimension *Rollen-abmessungen*			Bush diameter *Buchsen-durchmesser*
								d_1 max	d_4 max	G	d_5 max
	mm	mm	mm	mm	mm	mm	mm	mm	mm	mm	mm
Z40	50.8	63.5	76.2	88.9	101.6	127.0	152.4	31.75	40.0	2.5	17.0
Z100	76.2	88.9	101.6	127.0	152.4	177.8	203.2	47.50	60.0	3.5	23.0
Z160	101.6	127.0	152.4	177.8	203.2	228.6	254.0	66.70	82.0	3.5	33.0
Z300	152.4	177.8	203.2	254.0	304.8	–	–	88.90	114.0	8.5	38.0

Donghua Chain No. *Donghua Ketten Nr.*	Width between inner plates *Innere Breite*	Pin diameter *Bolzen-durch-messer*	Plate depth *Laschen-höhe*	Pin length *Bolzen-länge*		Plate thickness *Laschen-dicke*	Breaking load *Bruchkraft*	
	b_1 min	d_2 max	h_2 max	L max	Lc max	t/T max	Q min	*Q min
	mm	mm	mm	mm	mm	mm	kN/LB	kN/LB
Z40	15.0	14.0	25.0	37.0	40.5	4.0	40.0/9091	50.0/11362
Z100	19.0	19.0	40.0	45.0	50.5	5.0/4.0	100.0/22725	130.0/29540
Z160	26.0	26.9	50.0	58.0	63.5	7.0/5.0	156.0/35451	200.0/45454
Z300	38.0	32.0	60.0	84.0	94.0	10.0/8.0	300.0/68175	380.0/86362

*Q Higher breaking load with hardened plates
**Q höhere Bruchkraft durch gehärtete Laschen*

Förderketten mit Befestigungslaschen (Z Serie)
Conveyor chains with attachments (Z series)
Chaînes de manutention avec plaques de fixation (Série Z)

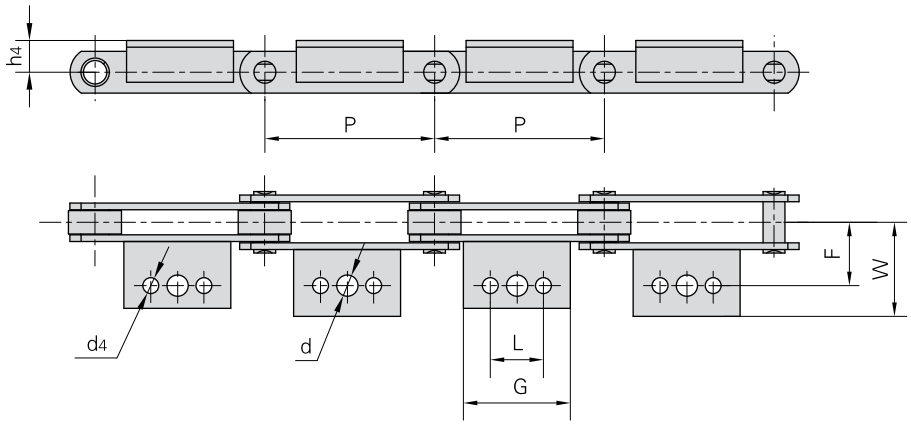

Donghua Chain No. *Donghua Ketten Nr.*		P	L	G	d	d4	F	W	h4
		mm	mm	mm	mm	mm	mm	mm	mm
Z40	△	50.8	–	45.0	10.7	9.3	38.1	64.5	19.0
	△ ☆	63.5	22.2	43.0				56.0	
	△ ☆	76.2						68.0	
	▲	88.9	31.8	50.0				56.0	
	▲	101.6		64.0				55.0	
	▲	127.0	57.2	84.0				56.0	
	▲	152.4							
Z100	△	76.2	–	30.0	14.0	10.5	44.5	65.0	32.0
	△	88.9							
	▲	101.6	31.8	64.0					
	△ ☆	127.0	57.2	84.0					
	▲	152.4		114.5					
	△ ☆	177.8	80.0	110.0					
	△ ☆	203.2							
Z160	△	101.6	–	35.0	15.5	12.3	54.0	77.0	38.0
	△ ☆	127.0	31.7	56.0					
	△ ☆	152.4	57.2	84.0					
	△ ☆	177.8							
	△ ☆	203.2	100.0	130.0					
	△ ☆	228.6		150.0					
	△ ☆	254.0	135.0	170.0					
Z300	△	152.4	38.1	70.0	17.0	14.0	73.0	100.0	51.0
	△	177.8							
	△ ☆	203.2	76.2	100.0					
	△ ☆	254.0	90.0	152.4					
	△ ☆	304.8	190.0	225.0					

△ attachments with 1 hole
△ *Befestigungslaschen mit einem Loch*

☆ attachments with 2 holes
☆ *Befestigungslaschen mit zwei Löchern*

▲ attachments with 3 holes
▲ *Befestigungslaschen mit drei Löchern*

Förderketten (ZE Serie)
Conveyor chains (ZE series)
Chaînes de manutention (Série ZE)

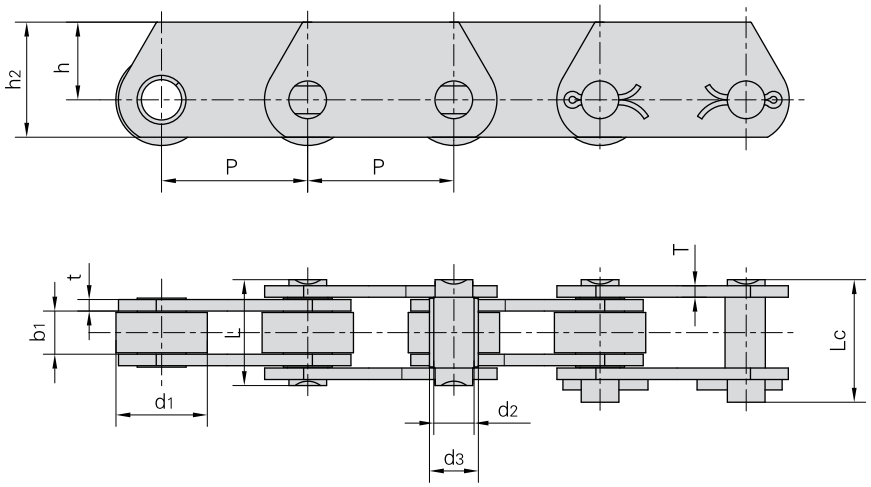

Donghua Chain No. *Donghua Ketten Nr.*	Pitch *Teilung* P mm							Roller diameter *Rollen-durchmesser* d_1 max mm	Pin diameter *Bolzen-durchmesser* d_2 max mm	Bush diameter *Buchsen-durchmesser* d_3 max mm
ZE40	50.8	63.5	76.2	88.9	101.6	127.0	152.4	31.75	14.0	17.0
ZE100	76.2	88.9	101.6	127.0	152.4	177.8	203.2	47.50	19.0	23.0
ZE160	101.6	127.0	152.4	177.8	203.2	228.6	254.0	66.70	26.9	33.0
ZE300	152.4	177.8	203.2	254.0	304.8	–	–	88.90	32.0	38.0

Donghua Chain No. *Donghua Ketten Nr.*	Width between inner plates *Innere Breite*	Pin length *Bolzen-länge*		Plate depth *Laschen-höhe*		Plate thickness *Laschen-dicke*	Breaking load *Bruchkraft*	
	b_1 min mm	L max mm	Lc max mm	h_2 max mm	h max mm	t/T max mm	Q min kN/LB	*Q min kN/LB
ZE40	15.0	37.0	40.5	40.0	27.0	4.0	40.0/9091	60.0/13636
ZE100	19.0	45.0	50.5	50.0	30.0	5.0/4.0	100.0/22725	160.0/36360
ZE160	26.0	58.0	63.5	70.0	45.0	7.0/5.0	160.0/36360	200.0/45454
ZE300	38.0	84.0	94.0	90.0	60.0	10.0/8.0	300.0/68175	380.0/86362

*Q Higher breaking load with hardened plates
*Q höhere Bruchkraft durch gehärtete Laschen.

Förderketten mit Hohlbolzen (ZC Serie)
Hollow pin conveyor chains (ZC series)
Chaînes de manutention avec axes creux (Série ZC)

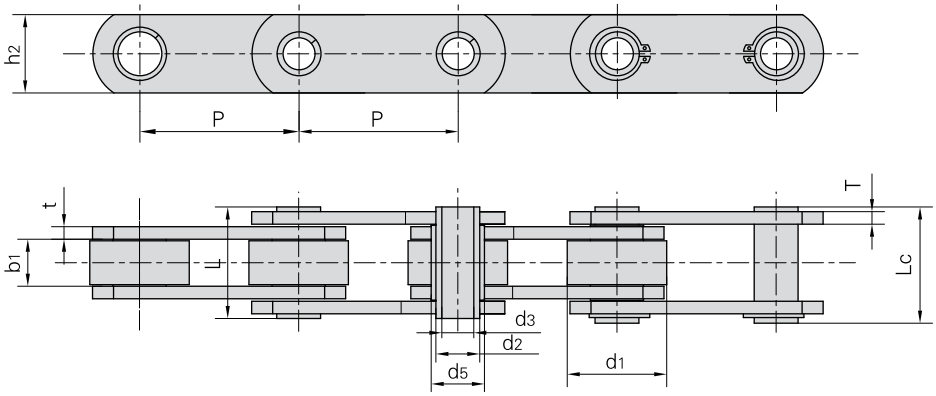

without rollers
ohne Rollen

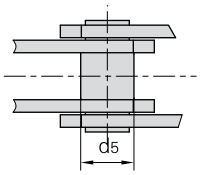

With B large rollers type
mit B-Laufrollen

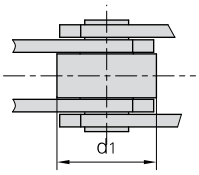

with D langed rollers type
mit D-Bundlaufrollen

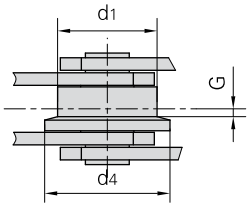

Donghua Chain No. *Donghua Ketten Nr.*	Pitch *Teilung* P mm							Roller dimension *Rollen-abmessungen* d1 max mm	d4 max mm	G mm	Bush diameter *Buchsen-durchmesser* d5 max mm	Plate depth *Laschen-höhe* h2 max mm
ZC21	38.1	50.8	63.5	76.2	–	–	–	25.40	–	–	11.0	18.0
ZC40	50.8	63.5	76.2	88.9	101.6	127.0	152.4	31.75	40.0	2.5	17.0	25.0
ZC60	76.2	88.9	101.6	127.0	152.4	177.8	203.2	47.50	60.0	3.5	23.0	40.0
ZC150	101.6	127.0	152.4	177.8	203.2	228.6	254.0	66.70	82.0	4.0	33.0	50.0
ZC300	152.4	177.8	203.2	254.0	304.8	–	–	88.90	114.0	8.5	38.0	60.0

Donghua Chain No. *Donghua Ketten Nr.*	Width between inner plates *Innere Breite* b1 min mm	Pin diameter *Bolzen-durchmesser* d2 max mm	d3 min mm	Pin length *Bolzen-länge* L max mm	Lc max mm	Plate thickness *Laschen-dicke* t/T max mm	Breaking load *Min. Bruchkraft* Q min kN/LB	*Q min kN/LB
ZC21	12.7	9.0	6.5	26.0	27.5	2.5	21.0/4772	27.1/6159
ZC40	15.0	14.0	10.2	36.4	37.7	4.0	40.0/9091	50.0/11362
ZC60	19.0	19.0	13.2	45.0	46.5	5.0/4.0	60.0/13636	120.0/27270
ZC150	26.0	26.9	20.2	58.0	60.5	7.0/5.0	150.0/34087	190.0/43177
ZC300	38.0	32.0	22.5	83.0	85.0	10.0/8.0	300.0/68175	380.0/86362

*Q Higher breaking load with hardened plates
**Q höhere Bruchkraft durch gehärtete Laschen.*

Förderketten
Conveyor chains
Chaînes de manutention

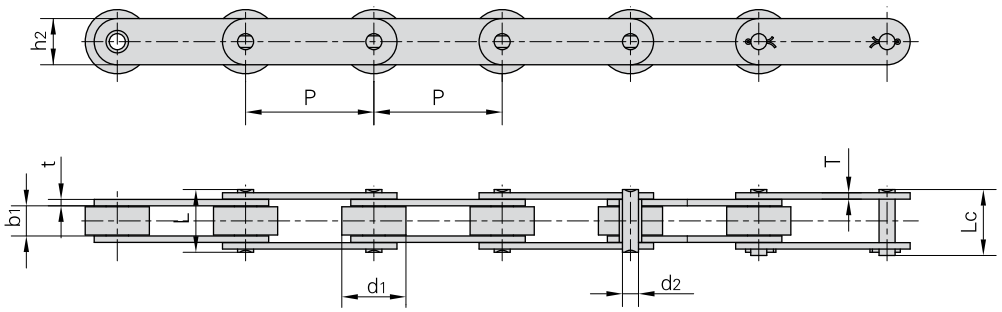

Donghua Chain No. *Donghua Ketten Nr.*	Pitch *Teilung*	Roller diameter *Rollen-durch-messer*	Width between inner plates *Innere Breite*	Pin diameter *Bolzen-durch-messer*	Pin length *Bolzen-länge*		Inner plate depth *Laschen-höhe*	Plate thickness *Laschen-dicke*	Ultimate tensile strength *Min. Bruchkraft*	Average tensile strength *Durchschn. Bruchkraft*	Weight per meter *Gewicht*
	P	d_1 max	b_1 min	d_2 max	L max	Lc max	h_2 max	t / T max	Q min	Q_0	q
	mm	mm	mm	mm	mm	mm	mm	mm	kN/LB	kN	kg/m
P15.875	15.875	12.70	11.00	3.66	18.70	19.90	8.00	0.60	3.0/674	3.3	0.80
P19.05F1	19.050	11.91	9.90	5.72	26.00	28.60	17.00	3.00	30.0/6750	33.0	1.84
P19.05F5	19.050	14.20	12.70	7.10	29.50	31.70	19.00	3.25	30.0/6744	33.0	2.47
P19.05F6	19.050	14.24	12.72	7.80	31.50	31.50	18.80	4.00/3.10	58.8/13218	64.7	2.67
*P20F1	20.000	12.00	16.00	6.00	32.10	34.50	18.00	3.00	35.5/7986	39.1	2.11
P22	22.000	14.00	14.00	8.00	37.00	40.00	40.00	5.00/4.00	40.0/9000	44.0	4.10
P25F4	25.000	15.00	18.00	7.00	34.50	37.50	21.00	3.00	45.0/10116	49.5	2.55
P25.4F5	25.400	14.00	12.70	7.50	30.00	33.00	22.50	3.50/3.00	50.0/112450	55.0	2.47
P25.4F8	25.400	12.70	12.70	7.00	28.50	30.50	20.80	3.00	45.0/10116	49.5	1.89
P25.4F9	25.400	14.00	12.70	7.00	28.50	30.50	19.70	3.00	45.0/10116	49.5	1.88
*P30	30.000	15.88	17.02	8.28	35.60	38.70	20.00	3.50/3.00	60.0/13500	66.0	2.35
*P30F1	30.000	15.88	9.70	8.28	24.80	65.50	22.00	3.10/2.50	45.0/10123	49.5	1.87
*P35F4	35.000	18.00	18.00	8.28	35.40	38.30	24.00	3.00	60.0/13500	66.0	2.51
P35F7	35.000	22.00	22.00	11.00	45.00	50.30	31.00	4.50	84.0/18883	92.4	4.82
P38.1F11	38.110	25.40	21.50	12.00	40.00	43.90	35.00	3.00	70.0/15750	77.0	5.18
P38.1F17	38.100	25.40	23.00	12.00	41.50	46.00	35.00	3.00	70.0/15736	77.0	5.25
P38.1F19	38.100	25.40	22.00	12.00	40.00	43.90	35.00	3.00	70.0/15736	77.0	5.18
P41F1	41.000	19.05	26.90	10.19	44.10	48.50	27.00	3.00	50.0/11240	55.0	2.87
P41.3F6	41.300	16.00	10.00	9.00	27.00	30.00	21.00	3.00	40.0/9000	44.0	1.80
P41.3F4	41.300	16.00	12.00	9.00	26.30	29.80	22.00	2.00	45.0/10116	49.5	1.72
P41.3F11	41.300	16.00	10.00	9.00	26.00	29.50	21.00	3.00	40.0/8992	44.0	1.79
P41.3F12	41.300	16.00	7.80	9.00	21.00	24.00	21.00	2.03	26.7/6002	29.4	1.29
P41.3F13	41.300	16.00	16.00	9.00	33.00	36.50	21.00	3.00	40.0/8992	44.0	2.00
P41.4F2	41.400	15.88	20.40	9.00	38.00	41.50	26.00	3.00	50.0/11240	55.0	2.29
P42	42.010	22.23	25.40	11.10	–	55.25	28.50	4.80	100.0/22496	110.0	5.36
P42F1	42.010	22.23	25.40	11.10	50.30	54.30	28.50	4.80	90.0/20456	99.0	5.26

*"∞" sharp plates
* "∞" *taillierte Laschen*

Förderketten
Conveyor chains
Chaînes de manutention

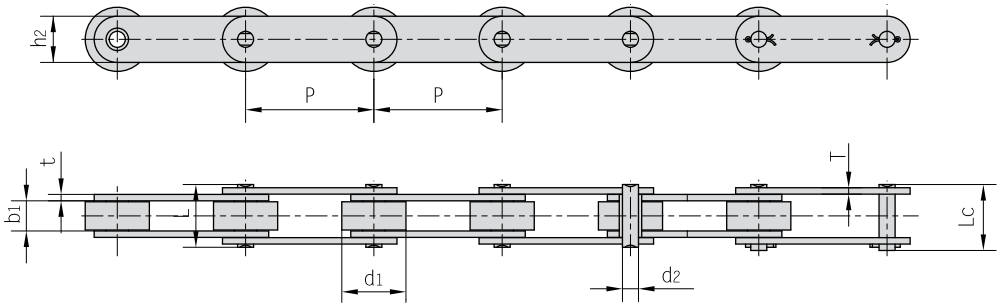

Donghua Chain No. *Donghua Ketten Nr.*	Pitch *Teilung*	Roller diameter *Rollen-durch-messer*	Width between inner plates *Innere Breite*	Pin diameter *Bolzen-durch-messer*	Pin length *Bolzen-länge*		Inner plate depth *Laschen-höhe*	Plate thickness *Laschen-dicke*	Ultimate tensile strength *Min. Bruchkraft*	Average tensile strength *Durchschn. Bruchkraft*	Weight per meter *Gewicht*
	P	d_1 max	b_1 min	d_2 max	L max	Lc max	h_2 max	t / T max	Q min	Q_0	q
	mm	mm	mm	mm	mm	mm	mm	mm	kN/LB	kN	kg/m
P44F1	44.00	25.30	25.00	15.90	86.00	86.00	38.00	10.00	250.0/56202	275.0	8.77
P44.45F1	44.45	22.23	24.70	11.10	62.00	65.50	32.00	6.70	110.0/24745	121.0	7.30
P44.45	44.45	22.23	12.57	5.94	25.90	27.70	18.00	2.42	31.8/7148	35.0	1.73
P45F4	45.00	19.05	19.56	9.53	41.20	45.50	30.00	4.00	75.0/16860	82.5	3.93
P49.8	49.80	28.58	31.55	14.27	64.80	69.60	47.80	6.40	222.4/50030	244.6	10.39
P50	50.00	25.40	25.40	14.63	54.30	57.80	40.00	5.00	100.0/22496	110.0	7.50
*P50F1	50.00	29.21	30.99	17.81	–	66.00	42.20	7.00	210.0/47726	231.0	9.68
P50F7	50.00	24.00	20.00	12.00	51.20	55.50	30.00	6.00	49.0/11023	54.0	5.65
P50F11	50.00	19.05	19.56	10.19	41.30	45.00	28.00	4.50/4.00	95.0/21371	104.5	3.60
P50F2	50.00	31.00	14.50	13.20	33.30	37.00	25.00	3.10	44.0/9891	48.4	3.47
P50F14	50.00	24.00	20.00	12.00	43.00	47.50	30.00	4.00	65.0/14612	71.5	5.08
P50F15	50.00	28.58	31.55	14.27	64.80	69.60	47.80	6.40	222.4/49997	244.6	10.38
P50F3	50.00	31.00	15.00	9.53	35.40	38.65	25.00	4.00	83.0/18659	91.3	4.12
P50F21	50.00	25.40	25.40	14.63	54.00	58.00	40.00	5.00	120.0/26977	132.0	7.35
P50.8F1	50.80	30.00	10.00	11.70	30.20	34.50	26.04	4.00	85.0/19108	93.5	3.60
P63F20	63.00	11.91	12.57	5.94	28.20	31.00	20.00	3.00	31.1/6991	34.2	2.43
P63.5	63.50	19.05	18.90	9.53	44.60	47.20	28.60	5.00	86.7/19704	95.4	3.77
P63.5F12	63.50	31.80	15.25	14.00	38.00	39.50	26.00	4.00	45.0/10116	49.5	4.03
*P69F1	69.85	15.88	17.02	8.28	36.70	39.70	20.60	4.00/3.25	60.8/13677	66.9	1.50
P69F3	69.00	15.88	17.00	8.28	35.20	38.50	20.60	4.00/3.25	60.8/13668	66.9	1.50
P69.85F1	69.85	31.75	25.40	14.27	66.40	73.50	34.93	7.90	170.0/38243	187.0	8.76
P75F8–G–2	75.00	31.80	16.10	8.00	40.00	40.00	22.00	3.20	60.8/13668	66.9	2.43
P76.2F2	76.20	50.00	26.00	24.00	69.60	74.70	59.50	8.00	350.0/79544	385.0	19.00
P76.2F10	76.20	11.91	11.00	5.94	280.00	30.40	18.50	3.25	31.8/7154	35.0	1.30
P76.2F25	76.20	43.18	49.28	23.90	130.00	130.00	60.45	14.20	697.0/156691	766.7	32.30
P76.2F35	76.20	12.07	13.00	8.10	24.50	26.50	18.00	1.85	29.0/6519	31.9	0.77

*"∞" sharp plates
* "∞" *taillierte Laschen*

Förderketten
Conveyor chains
Chaînes de manutention

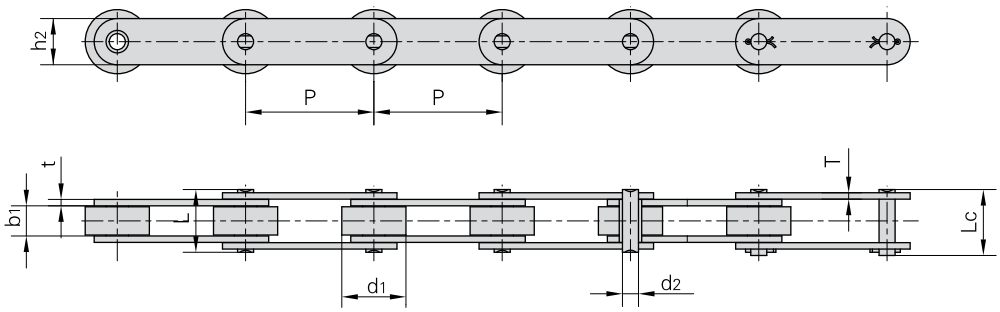

Donghua Chain No. *Donghua Ketten Nr.*	Pitch *Teilung*	Roller diameter *Rollen-durch-messer*	Width between inner plates *Innere Breite*	Pin diameter *Bolzen-durch-messer*	Pin length *Bolzen-länge*		Inner plate depth *Laschen-höhe*	Plate thickness *Laschen-dicke*	Ultimate tensile strength *Min. Bruchkraft*	Average tensile strength *Durchschn. Bruchkraft*	Weight per meter *Gewicht*
	P	d_1 max	b_1 min	d_2 max	L max	Lc max	h_2 max	t / T max	Q min	Q_0	q
	mm	mm	mm	mm	mm	mm	mm	mm	kN/LB	kN	kg/m
P78.11F11	78.11	31.75	31.75	15.88	86.5	86.5	38.1	9.53	161.6/36329	177.8	11.34
P80F1	80.00	42.00	24.00	15.00	55.0	60.0	60.0	6.00	250.0/56817	275.0	11.90
P80F5	80.00	28.00	34.00	16.00	68.0	72.0	45.0	5.00/8.00	190.0/43181	209.0	8.80
P80F6	80.00	30.00	32.00	15.00	58.6	62.6	60.0	5.00	98.0/22272	108.0	9.75
P80F10	80.00	42.00	22.00	15.00	53.0	58.0	60.0	6.00	250.0/56817	275.0	11.40
P80F37	80.00	26.00	25.00	14.00	59.3	59.3	35.0	6.00/5.00	155.0/34845	170.5	5.72
P80F35	80.00	42.00	23.00	16.00	56.0	61.5	60.0	6.00	160.0/35969	176.0	11.50
P100H	100.00	20.00	28.00	14.00	–	62.0	40.0	5.00	103.0/23170	113.3	4.99
P100F7	100.00	29.00	30.00	14.50	–	71.0	38.1	6.00	95.0/21371	104.5	6.72
P100F25	100.00	25.40	31.50	14.00	62.6	77.5	38.1	6.00	95.0/21371	104.5	6.17
P100F52	100.00	38.00	18.00	9.53	47.0	49.3	32.0	5.00	86.7/19504	95.3	4.67
P100F53	100.00	52.00	21.00	14.00	46.0	51.0	40.0	5.00/4.00	110.0/24745	121.0	7.45
P100F56	100.00	35.00	13.50	10.00	–	46.0	30.0	5.00	70.0/15747	77.0	3.98
P100F77	100.00	38.00	17.50	11.30	48.0	48.0	32.0	4.50	65.0/14612	71.5	4.42
P100F84	100.00	38.00	22.00	9.50	57.5	57.5	35.0	6.00	70.0/15736	77.0	6.27
P100F92	100.00	60.00	38.00	20.00	81.0	94.0	47.0	8.00	220.0/49457	242.0	16.9
P100F111	100.00	29.00	30.00	14.50	71.0	71.0	38.1	6.00	95.0/21356	104.5	6.75
P100F122	100.00	38.00	17.50	11.30	41.8	45.9	32.0	4.50	65.0/14612	71.5	4.33
P101.6F4	101.60	66.70	25.40	26.90	59.2	80.0	51.0	7.10/5.10	134.0/30454	147.4	15.70
P101.6F18	101.60	31.75	15.00	10.00	37.0	41.0	25.0	4.00	40.0/9000	44.0	2.79
P101.6F24	101.60	47.60	22.20	11.11	47.8	52.2	32.0	4.50	75.0/16872	82.5	5.80
P101.6F46	101.60	50.80	29.40	17.50	72.0	77.0	44.5	7.90	177.9/40013	197.4	12.56
P101.6F71	101.60	38.10	25.40	11.10	51.1	55.2	28.7	4.80	52.5/11810	57.8	4.95
P101.6F73	101.60	47.60	19.10	19.00	53.6	58.0	38.1	6.00	66.7/15000	73.4	7.52
P101.6F51	101.60	44.45	28.70	11.10	54.5	60.8	28.7	4.80	53.7/12080	59.0	6.17
P101.6F69	101.60	38.10	23.80	12.70	–	65.1	33.0	6.40	100.0/22496	110.8	6.50
P103.45	103.45	45.21	32.51	23.88	99.0	109.0	63.5	12.70	500.0/112480	535.0	25.00
P103.89	103.89	66.68	57.15	33.32	–	148.0	88.9	15.88	500.0/112480	550.0	55.83

Förderketten
Conveyor chains
Chaînes de manutention

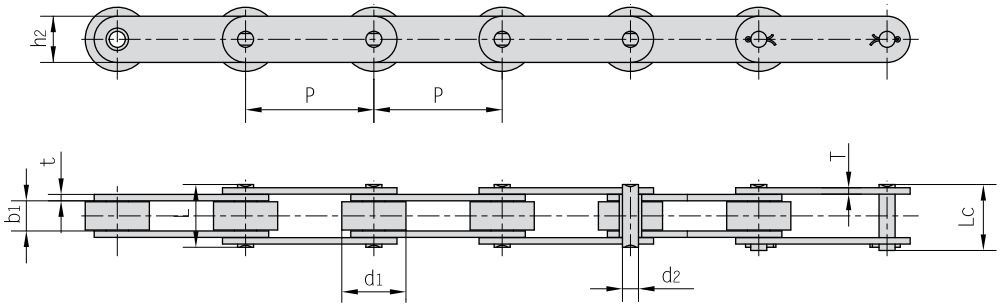

Donghua Chain No. *Donghua Ketten Nr.*	Pitch *Teilung*	Roller diameter *Rollen-durch-messer*	Width between inner plates *Innere Breite*	Pin diameter *Bolzen-durch-messer*	Pin length *Bolzen-länge*		Inner plate depth *Laschen-höhe*	Plate thickness *Laschen-dicke*	Ultimate tensile strength *Min. Bruchkraft*	Average tensile strength *Durchschn. Bruchkraft*	Weight per meter *Gewicht*
	P	d_1 max	b_1 min	d_2 max	L max	Lc max	h_2 max	t / T max	Q min	Q_0	q
	mm	mm	mm	mm	mm	mm	mm	mm	kN/LB	kN	kg/m
P125F1	125.0	50.00	55.00	26.00	–	110.00	60.00	8.00	300.0/68181	330.0	13.53
P125F2H	125.0	32.00	18.50	8.00	–	43.00	20.00	4.00	60.0/13497	66.0	2.65
P127F1	127.0	76.20	76.20	38.10	–	186.50	101.60	19.30	1690.0/380178	1860.0	73.85
P150F10	150.0	29.00	30.00	14.00	–	71.00	40.00	6.00	180.0/40492	198.0	5.71
P150F15	150.0	46.00	70.00	18.00	–	133.00	54.00	10.00	200.0/44991	220.0	17.25
RF10150–S	150.0	29.00	30.00	14.50	–	69.00	38.10	6.30	102.5/23295	112.7	6.00
P150.5	150.5	38.12	40.81	16.02	83.5	88.00	44.23	8.50	250.0/56817	275.0	10.00
P152F5	152.4	66.70	25.40	26.90	59.2	80.00	50.00	7.10/5.10	134.0/30454	147.4	12.10
P152F10	152.4	57.20	37.10	15.90	76.8	87.00	44.50	7.90	190.0/43181	209.0	11.29
P152F28	152.4	88.90	38.00	31.80	82.0	89.00	61.00	8.90/7.60	200.0/44992	220.0	23.30
P152F35	152.4	88.90	38.00	23.00	82.0	87.05	61.00	8.90/7.60	266.7/60000	293.4	22.65
P152F37	152.4	66.70	25.40	26.92	64.0	83.50	50.80	7.80/6.50	120.0/27000	132.0	12.22
P152F39	152.4	47.60	19.00	19.00	53.6	58.00	38.10	6.30	120.0/27000	132.0	6.26
P152F49	152.4	63.50	34.00	15.60	–	82.00	65.00	8.00	160.0/35993	176.0	16.30
P152F67	152.4	88.90	101.00	47.63	–	228.70	114.30	22.00	1350.0/303696	1445.0	101.30
P152F42	152.4	63.50	34.90	19.00	–	93.00	50.80	9.50	152.0/34194	168.9	15.80
P152F100	152.4	69.90	38.80	19.00	–	95.50	50.80	9.50	152.0/34194	168.9	17.76
*P154F1	154.0	44.45	85.60	28.60	–	150.00	80.00	12.50	500.0/112480	550.0	31.00
P160F15	160.0	64.00	37.00	15.00	–	100.40	45.00	8.50	160.0/35993	176.0	13.10
P160F16	160.0	69.85	38.10	27.00	–	101.00	50.80	9.00/8.00	160.0/35993	293.7	16.60
P160F16	160.0	69.85	38.10	27.00	–	101.00	50.80	9.00	267.0/60064	296.4	16.60
P160F27	160.0	69.85	38.10	17.53	–	81.00	50.80	6.30	244.0/54890	268.4	13.68
P200F10	200.0	100.00	47.00	25.00	–	103.50	72.00	10.00	308.7/69445	339.6	28.30
P200F15	200.0	40.10	51.40	19.10	–	109.50	50.80	9.50	213.0/47916	236.4	12.58
P228.6F9	228.6	107.95	77.70	31.75	–	173.60	88.90	16.00	598.0/134526	657.0	56.70
P250F36	250.0	100.00	57.20	22.23	–	117.00	63.50	9.50	314.0/70637	348.5	25.70

*Bushing chain: d_1 in the table indicate the external diameter of the bushing.
**Buchsenketten: In dieser Tabelle zeigt d_1 den Außendurchmesser der Buchsen.*

Förderketten mit Befestigungslaschen
Conveyor chains with attachments
Chaînes de manutention avec pattes d'attache

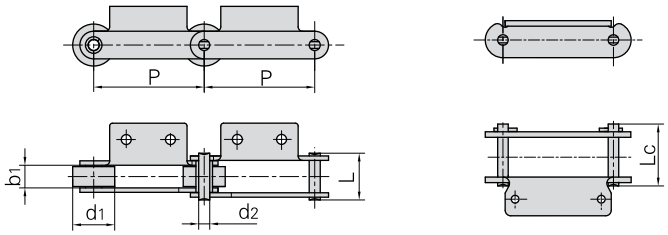

Donghua Chain No. *Donghua Ketten Nr.*	Pitch *Teilung*	Roller diameter *Rollen-durchmesser*	Width between inner plates *Innere Breite*	Pin diameter *Bolzen-durchmesser*	Pin length *Bolzen-länge*		Ultimate tensile strength *Min. Bruchkraft*	Average tensile strength *Durchschn. Bruchkraft*	Weight per meter *Gewicht*
	P	d_1 max	b_1 min	d_2 max	L max	Lc max	Q min	Q_0	q
	mm	mm	mm	mm	mm	mm	kN/LB	kN	kg/m
*P28	28.575	11.68	16.00	7.870	–	32.4	50.0/11364	55.0	2.66
*P28F1	28.575	11.68	16.13	7.870	–	32.4	50.0/11364	55.0	2.60
P38F10K1	38.000	15.88	13.00	8.280	32.5	35.5	55.0/12364	60.5	2.60
P38F11K1	38.000	15.88	13.00	8.280	30.5	33.5	45.0/10116	49.5	2.30
P38.1F2	38.100	22.50	13.00	8.000	29.5	33.3	40.0/9091	44.0	2.42
P39.75A1	39.750	17.25	22.00	7.800	40.5	44.3	47.0/10566	51.7	3.10
P41.3F9A2	41.300	22.00	11.00	9.000	28.6	31.6	40.0/8992	44.0	2.30
P42F2	42.000	11.00	13.00	6.000	30.0	32.5	50.0/11248	55.0	1.85
P42.5	42.500	15.88	15.75	7.920	32.7	36.5	56.7/12886	62.0	3.40
P44.45F5	44.450	25.40	16.51	7.920	36.2	38.9	35.0/7874	38.5	3.85
P44.45F7A1	44.450	28.58	15.00	9.530	34.5	38.7	45.0/10116	49.5	3.80
P46	46.000	16.00	16.00	8.000	36.0	39.0	55.0/12373	60.5	3.23
P50F16	50.000	24.90	10.70	7.800	26.6	28.8	33.0/7418	36.3	2.22
P50.8F22A1–F	50.800	32.00	15.00	11.700	39.0	43.0	50.0/11240	55.0	6.13
P75F6	75.000	16.00	16.00	8.000	–	41.0	32.0/7200	35.2	2.44
P75F8A2	75.000	31.80	16.00	8.000	–	41.0	32.0/7200	35.2	3.52
P75F8A2–F	75.000	30.00	16.00	8.000	–	41.0	32.0/7200	35.2	3.80
P75F20A1	75.000	40.00	22.00	12.000	47.0	52.0	90.0/20232	99.0	6.81
P76.2F1	76.200	31.75	15.00	14.200	–	44.2	60.0/13500	66.0	4.45
P78.11F8	78.110	31.80	37.10	15.000	–	83.5	100.0/22727	110.0	12.05
P78.11F9	78.110	31.75	38.10	15.875	–	90.0	90.0/20246	99.0	11.28
P80F4	80.000	30.00	15.00	13.900	42.5	46.5	86.0/19346	95.0	3.97
P80F4–P	80.000	45.00	15.00	13.900	42.5	46.5	86.0/19345	94.6	5.67
P100F1	100.000	42.00	23.00	9.530	52.0	54.3	86.7/19704	95.0	6.06
P100F2	100.000	36.00	18.00	9.530	47.0	49.3	86.7/19704	95.0	4.60
P100F3	100.000	29.00	30.00	14.500	–	71.0	95.0/21591	105.0	9.46
P100F4	100.000	40.00	22.00	11.300	–	53.5	65.0/14773	72.0	5.13
P100F5	100.000	22.20	22.00	11.300	–	53.5	65.0/14773	72.0	3.90
P100F12	100.000	45.00	37.00	12.000	64.0	67.0	150.0/34091	165.0	10.30
P100F15	100.000	38.00	25.80	10.700	–	57.0	45.0/10227	50.0	5.25
P100F33	100.000	40.00	27.00	11.300	–	64.8	100.0/22727	110.0	6.80
P100F41A2	100.000	45.00	25.40	12.700	–	63.8	80.0/17997	88.0	8.26
P100F50	100.000	36.00	29.00	15.000	70.0	76.0	200.0/44992	220.0	13.93

*Bushing chain: d_1 in the table indicate the external diameter of the bushing.
**Buchsenketten: In dieser Tabelle zeigt d_1 den Außendurchmesser der Buchsen.*

Förderketten mit Befestigungslaschen
Conveyor chains with attachments
Chaînes de manutention avec pattes d'attache

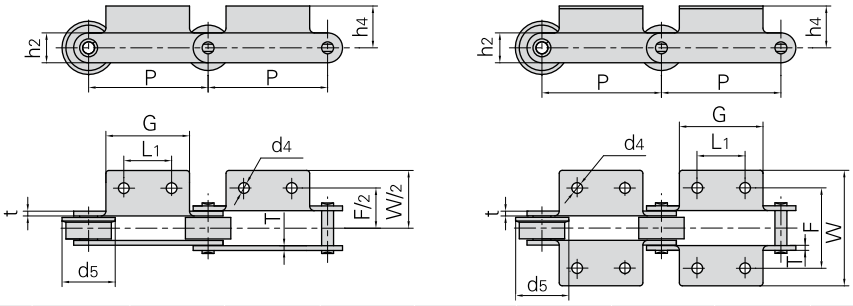

Donghua Chain No. *Donghua Ketten Nr.*	P	L1	G	F	W	h4	h2	d4	t/T	d5
	mm	mm	mm	mm	mm	mm	mm	mm	mm	mm
*P28	28.575	28.58	51.00	46.74	61.20	13.70	22.23	8.75	3.10	–
*P28F1	28.575	28.58	50.80	46.80	61.86	12.70	22.23	9.02	3.10	–
P38F10K1	38.000	△	30.00	49.00	79.00	16.50	21.00	8.40	3.5	–
P38F11F1	38.000	△	30.00	47.00	77.00	16.50	21.00	8.40	3.00	–
P38.1F2	38.100	△	28.00	56.00	76.00	17.20	19.00	9.00	3.00	–
P39.75A1	39.750	△	61.00	62.10	94.10	16.50	21.25	11 × 8	3.50	–
P41.3F9A2	41.300	12.00	24.00	36.20	48.20	17.00	21.00	5.50	3.00	–
P42F2	42.000	△	35.00	40.00	76.00	12.80	17.00	6.00	3.00	–
P42.5	42.500	19.00	38.00	53.50	70.00	19.50	22.00	7.00	3.25	–
P44.45F5	44.450	△	34.93	57.16	74.46	19.05	19.05	8.00	3.80	–
P44.45F7A1	44.450	△	22.00	66.00	84.80	12.80	25.60	7.00	3.00	–
P46	46.000	△	38.00	54.00	82.80	18.00	22.00	6.00	4.00	–
P50F16	50.000	△	41.30	45.00	61.40	36.00	20.00	6.50	3.00	–
P50.8F22A1–F	50.800	△	45.00	75.00	110.40	20.00	26.40	9.00	4.50	40.00
P75F6	75.000	30.00	55.00	60.00	92.00	20.00	22.00	10.00	3.00	–
P75F8A2	75.000	30.00	55.00	60.00	92.00	20.00	22.00	10.00	3.20	–
P75F8A2–F	75.000	30.00	55.00	60.00	92.00	20.00	22.00	10.00	3.20	38.00
P75F20A1	75.000	△	55.00	64.00	92.00	25.00	32.00	M8	4.50	50.00
P76.2F1	76.200	31.00	58.00	75.40	107.00	21.25	29.00	10.50	4.50	–
P78.11F8	78.110	30.00	65.00	120.00	150.00	35.00	38.10	12.00	7.90	–
P78.11F9	78.110	38.10	116.60	104.60	133.30	31.75	38.10	14.30	7.90	–
P80F4	80.000	40.00	70.20	57.40	87.40	22.95	27.10	8.50	5.60/4.15	–
P80F4–P	80.000	40.00	70.20	57.40	87.40	22.95	27.10	8.50	5.60/4.15	–
P100F1	100.000	78.00	96.00	73.00	103.00	17.50	32.00	7.00	5.00	–
P100F2	100.000	40.00	70.00	68.00	98.00	17.50	32.00	9.00	5.00	–
P100F3	100.000	40.00	70.00	100.00	128.00	28.00	38.10	12.00	6.00	–
P100F4	100.000	40.00	65.00	70.00	94.00	22.00	32.00	10.00	4.50	–
P100F5	100.000	40.00	65.00	70.00	94.00	22.00	32.00	10.00	4.50	–
P100F12	100.000	60.00	90.00	98.00	128.00	34.00	40.00	11.50	5.00	64.00
P100F15	100.000	29.85	65.00	75.00	115.60	20.00	28.00	9.00	4.80	–
P100F33	100.000	40.00	65.00	78.30	102.30	24.30	32.00	10.00	6.00	50.00
P100F41A2	100.000	40.00	70.00	80.00	126.00	25.00	31.80	12.00	6.30	60.00
P100F50	100.000	40.00	70.00	156.00	196.00	43.00	60.00	9.00	8.00	–

△ Attachments with 1 hole
△ *Befestigungslaschen mit einem Loch*

*Bushing chain: d1 in the table indicate the external diameter of the bushing.
**Buchsenketten: In dieser Tabelle zeigt d1 den Außendurchmesser der Buchsen.*

Förderketten mit Befestigungslaschen
Conveyor chains with attachments
Chaînes de manutention avec pattes d'attache

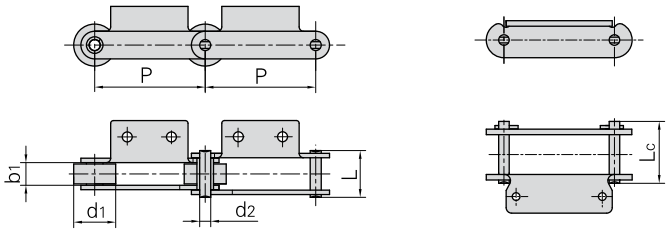

Donghua Chain No. *Donghua Ketten Nr.*	Pitch *Teilung*	Roller diameter *Rollen-durchmesser*	Width between inner plates *Innere Breite*	Pin diameter *Bolzen-durchmesser*	Pin length *Bolzen-länge*		Ultimate tensile strength *Min. Bruchkraft*	Average tensile strength *Durchschn. Bruchkraft*	Weight per meter *Gewicht*
	P	d_1 max	b_1 min	d_2 max	L max	Lc max	Q min	Q_0	q
	mm	mm	mm	mm	mm	mm	kN/LB	kN	kg/m
P100F75	100.0	26.00	22.00	10.700	–	55.0	45.0/10116	50.0	4.75
P100F82A1	100.0	31.80	16.10	8.000	–	41.0	32.0/7200	35.2	3.07
P100F93	100.0	40.00	22.00	11.300	–	59.5	86.0/19333	94.6	8.07
P100F94K1	100.0	47.60	26.00	27.000	61.0	70.0	160.0/35993	176.0	12.9
P100F95A2	100.0	32.00	14.00	11.100	32.5	36.0	60.0/13500	66.0	3.11
P100F99K2	100.0	40.00	22.00	11.100	48.4	53.4	65.0/14612	71.5	5.54
P100F104	100.0	40.00	22.00	11.300	–	60.7	146.0/32822	160.6	7.33
P100F108K2	100.0	40.00	22.00	11.300	–	53.5	65.0/14612	71.5	5.80
P100F109A2	100.0	45.00	21.00	14.000	48.0	53.0	50.0/11240	55.0	6.94
P100F101A2	100.0	22.20	24.00	11.100	57.5	62.7	70.0/15736	77.0	5.50
*P101.6F1	101.6	25.00	55.00	16.000	–	110.0	60.0/13636	66.0	11.90
P101.6F9	101.6	31.75	15.00	14.200	–	44.2	66.7/15159	73.0	8.40
*P101.6F17K2	101.6	25.40	55.60	15.880	–	115.0	180.0/40492	198.0	12.40
*P101.6F18A2	101.6	31.75	15.00	10.000	37.0	41.0	40.0/9000	44.0	3.66
P101.6F21	101.6	38.10	53.80	15.875	–	112.2	180.0/40492	198.0	14.90
P101.6F25	101.6	36.50	50.80	19.050	–	112.0	200.0/44992	220.0	18.10
P101.6F30A2	101.6	38.00	22.00	10.000	–	52.8	100.0/22727	110.0	5.19
P101.6F35	101.6	66.70	25.00	25.400	61.0	66.0	160.0/35993	176.0	15.73
P101.6F36	101.6	57.15	33.40	15.880	–	92.0	180.0/40492	198.0	14.33
P101.6F39	101.6	57.15	33.30	16.000	82.0	89.0	127.0/28570	140.0	17.70
P101.6F40A2	101.6	38.10	21.00	10.000	–	52.0	50.0/11248	55.0	4.69
P101.6F41K1	101.6	44.50	27.00	11.300	–	67.0	78.0/17546	86.0	10.20
P101.6F43A2	101.6	50.00	16.00	16.000	49.0	53.5	145.0/32620	160.0	7.95
P101.6F54K1	101.6	57.15	33.30	16.000	–	89.0	177.8/39998	197.4	17.86
P101.6F56K2	101.6	32.00	54.50	16.000	–	115.0	180.0/40493	199.8	16.51
P101.6F57K3	101.6	57.15	31.75	15.900	–	67.4	166.0/37343	191.2	13.90
P101.6F62K1	101.6	57.15	33.30	16.000	–	89.0	177.8/39998	197.4	18.83
P101.6F69K3	101.6	38.10	23.80	12.700	–	65.1	100.0/22496	110.8	8.34
P101.6F76	101.6	57.15	31.56	16.000	56.2	62.0	82.6/18582	91.7	11.57
P101.6F80A2	101.6	44.50	31.60	15.900	–	81.0	130.0/29245	144.3	11.36
P101.6F84A2	101.6	50.80	30.23	11.180	–	62.0	80.36/18078	89.2	9.04
P117	117.0	35.00	50.00	17.000	–	102.0	150.0/33744	166.5	13.40
P120	120.0	50.00	28.00	12.000	54.0	58.0	160.0/35993	176.0	8.14

*Bushing chain: d_1 in the table indicate the external diameter of the bushing.
**Buchsenketten: In dieser Tabelle zeigt d_1 den Außendurchmesser der Buchsen.*

Förderketten mit Befestigungslaschen
Conveyor chains with attachments
Chaînes de manutention avec pattes d'attache

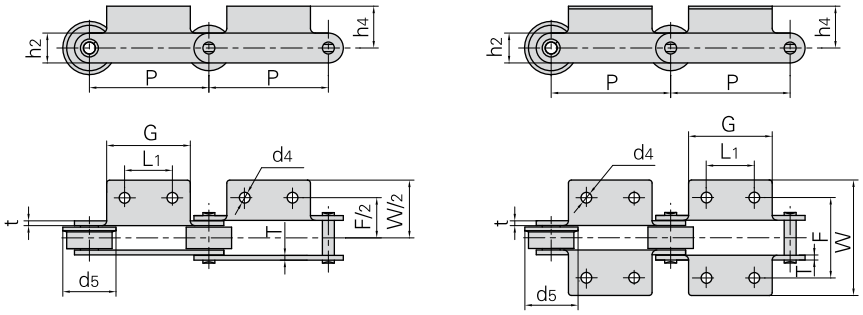

Donghua Chain No. *Donghua Ketten Nr.*	P	L_1	G	F	W	h_4	h_2	d_4	t/T	d_5
	mm	mm	mm	mm	mm	mm	mm	mm	mm	mm
P100F75	100.0	29.85	65.0	68.0	112.0	20.00	28.00	12 × 9	4.80	–
P100F82A1	100.0	△	65.0	60.0	92.0	20.00	22.00	10.00	3.20	42.0
P100F93	100.0	40.00	70.0	100.0	124.0	30.00	32.00	100.00	6.00	–
P100F94K1	100.0	△	35.0	85.0	116.0	38.50	55.00	13.00	7.00/5.00	–
P100F95A2	100.0	30.00	51.0	76.0	104.0	18.00	30.00	9.00	3.00	–
P100F99K2	100.0	40.00	65.0	70.0	104.0	22.00	32.00	9.50	4.80	–
P100F104	100.0	40.00	65.0	70.0	104.0	23.60	32.00	10.00	6.30	–
P100F108K2	100.0	40.00	65.0	70.0	94.0	35.00	32.00	10.00	4.50	–
P100F109A2	100.0	40.00	60.0	110.0	130.0	17.50	35.00	6.40	5.00	–
P100F101A2	100.0	41.00	65.0	86.0	134.0	24.50	33.00	9.000	6.00	–
*P101.6F1	101.6	44.00	73.0	136.0	165.0	30.00	40.00	11.00	10.00	–
P101.6F9	101.6	31.00	65.0	75.4	107.0	21.25	29.00	10.50	4.50	–
*P101.6F17K2	101.6	44.50	84.0	136.0	172.0	25.40	38.00	11.00	10.00	–
*P101.6F18A2	101.6	30.00	60.0	76.0	124.0	19.00	25.00	10.50	4.00	–
P101.6F21	101.6	44.50	141.2	134.9	177.8	28.70	38.10	14.00	9.65	–
P101.6F25	101.6	44.45	152.4	140.7	171.6	41.28	44.45	13.50	9.50	–
P101.6F30A2	101.6	40.00	70.0	80.0	107.0	22.00	30.00	11.50	5.00	–
P101.6F35	101.6	50.00	70.0	107.0	127.0	40.00	51.00	10.00	6.00	–
P101.6F36	101.6	△	50.8	98.4	142.9	32.00	38.10	14.30	9.50	–
P101.6F39	101.6	△	50.8	101.6	146.4	31.75	38.10	14.20	9.65	–
P101.6F40A2	101.6	40.00	70.0	80.0	108.0	22.00	25.00	12.00	5.00	–
P101.6F41K1	101.6	△	70.0	100.0	128.0	28.00	28.60	12.00	6.30	–
P101.6F43A2	101.6	32.00	56.0	80.0	112.0	20.00	40.00	9.50	6.00	–
P101.6F54K1	101.6	–	50.8	101.6	146.4	31.75	38.10	14.20	9.65	–
P101.6F56K2	101.6	45.00	81.0	142.2	179.2	32.50	45.00	11 × 15	10.00	–
P101.6F57K3	101.6	50.80	82.6	101.6	132.5	36.50	44.45	10.3/15	6.40	–
P101.6F62K1	101.6	–	50.8	101.6	146.4	31.75	41.30	14.20	9.65	–
P101.6F69K3	101.6	38.10	68.0	69.9	103.2	22.20	33.00	10.30	6.40	–
P101.6F76	101.6	60.00	76.2	70.0	101.2	35.00	38.10	5.00	4.00	70.0
P101.6F80A2	101.6	40.00	80.0	110.0	146.0	35.00	38.10	15.00	8.00	–
P101.6F84A2	101.6	50.80	79.5	101.6	133.6	28.70	31.80	9.60	4.80	–
P117	117.0	90.00	160.0	136.0	176.0	35.00	40.00	14.00	8.00	–
P120	120.0	50.00	75.0	82.0	119.6	20.00	40.00	7.00	5.00	59.0

△ Attachments with 1 hole
△ *Befestigungslaschen mit einem Loch*

*Bushing chain: d_1 in the table indicate the external diameter of the bushing.
**Buchsenketten: In dieser Tabelle zeigt d_1 den Außendurchmesser der Buchsen.*

Förderketten mit Befestigungslaschen
Conveyor chains with attachments
Chaînes de manutention avec pattes d'attache

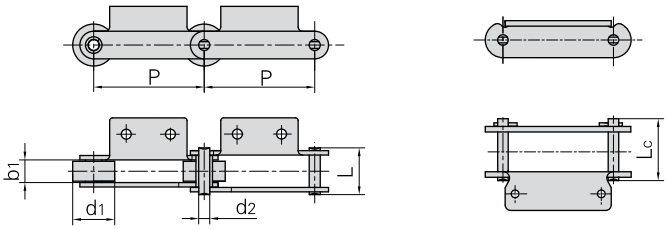

Donghua Chain No. *Donghua Ketten Nr.*	Pitch *Teilung*	Roller diameter *Rollen-durchmesser*	Width between inner plates *Innere Breite*	Pin diameter *Bolzen-durchmesser*	Pin length *Bolzen-länge*		Ultimate tensile strength *Min. Bruchkraft*	Average tensile strength *Durchschn. Bruchkraft*	Weight per meter *Gewicht*
	P	d_1 max	b_1 min	d_2 max	L max	Lc max	Q min	Q_0	q
	mm	mm	mm	mm	mm	mm	kN/LB	kN	kg/m
P120A2F4	120.0	32.00	37.00	12.70	69.1	–	140.0/31494	155.4	9.00
P125F2	125.0	32.00	18.50	8.00	39.0	–	120.0/26995	132.0	2.66
P125F9A2	125.0	45.00	25.00	14.60	55.5	60.0	50.0/11248	55.0	2.58
P125F2K2–P	125.0	32.00	18.50	8.00	–	40.0	50.0/11248	55.0	2.83
P130K2F2	130.0	80.00	40.00	24.00	77.6	88.3	200.0/44992	218.0	13.90
P150F2	150.0	40.00	27.00	11.10	57.0	61.0	124.6/28318	137.0	5.40
P150F4	150.0	50.00	37.00	16.00	77.5	82.5	170.0/38636	187.0	10.90
P150F6	150.0	50.00	30.00	12.00	49.5	–	86.7/19704	95.0	7.27
P150F11A2	150.0	46.70	21.50	15.00	46.6	51.5	130.0/29245	142.0	7.13
P150F13A2	150.0	47.60	21.50	15.00	50.6	55.5	130.0/29245	142.0	8.52
P150F14A2	150.0	47.60	21.50	19.00	50.6	56.5	130.0/29245	142.0	8.59
P150F16A2	150.0	45.00	30.00	16.00	–	75.5	170.0/38243	187.0	8.56
P150F18	150.0	50.00	37.00	16.00	77.5	82.5	170.0/38243	187.0	14.49
RF10150RA2	150.0	50.80	30.00	14.50	69.0	–	113.0/25682	124.0	9.20
P150F21A2	150.0	57.48	35.91	19.05	–	79.0	150.0/33744	166.5	11.18
P150F26A2	150.0	44.50	30.00	14.50	–	69.0	113.0/25420	126.0	7.96
P150F32A2	150.0	44.50	27.00	11.30	–	67.0	78.0/17547	86.5	6.78
P150F31A2	150.0	50.00	27.00	12.00	–	70.0	150.0/33744	166.0	8.50
P152F	152.4	40.10	37.50	19.10	97.5	–	328.7/74704	378.0	15.88
P152F4	152.4	50.80	30.60	14.27	62.8	67.5	88.0/20000	100.0	9.24
P152F11	152.4	38.00	53.50	14.70	112.4	–	130.0/29245	142.0	12.60
P152F16	152.4	70.00	76.20	25.40	152.0	–	160.0/35993	176.0	41.50
P152F19	152.4	50.80	30.60	14.27	62.8	67.5	112.0/25195	123.2	9.24
P152F20	152.4	47.60	39.70	19.05	99.7	–	300.0/67487	330.0	18.33
P152F32K2	152.4	36.00	45.00	20.00	103.0	–	300.0/67487	330.0	14.93
P152F33	152.4	36.00	68.00	20.00	128.0	–	300.0/67487	330.0	16.50
P152F43	152.4	76.20	35.00	23.81	108.0	–	446.8/100510	513.5	27.60
P152F50	152.4	101.60	44.00	22.20	87.0	–	250.0/56240	275.0	26.70
P152F54	152.4	30.00	53.00	16.00	112.0	–	175.0/39380	193.0	11.10
P152F56	152.4	50.80	33.34	15.88	86.0	–	113.0/25420	124.3	10.70
RF6205MF6A2	152.4	65.00	37.10	15.90	88.0	–	158.0/35543	186.0	16.80
P152F42K2F1	152.4	63.50	34.90	19.00	93.0	–	152.0/34193	168.9	18.80
*P160F1	160.0	36.00	55.00	20.00	108.0	–	50.0/11364	55.0	14.50

*Bushing chain: d_1 in the table indicate the external diameter of the bushing.
**Buchsenketten: In dieser Tabelle zeigt d_1 den Außendurchmesser der Buchsen.*

Förderketten mit Befestigungslaschen
Conveyor chains with attachments
Chaînes de manutention avec pattes d'attache

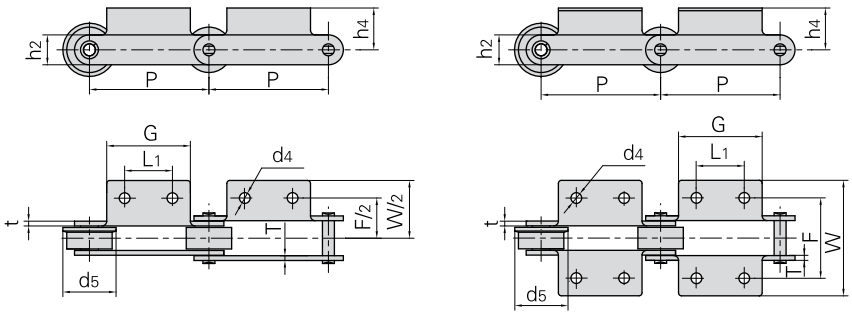

Donghua Chain No. *Donghua Ketten Nr.*	P	L_1	G	F	W	h_4	h_2	d_4	t/T	d_5
	mm	mm	mm	mm	mm	mm	mm	mm	mm	mm
P120A2F4	120.0	65.0	100.0	96.00	118.00	44.50	48.00	11.00	6.00	–
P125F2	125.0	46.0	76.0	64.00	90.00	14.00	22.00	10.00	3.00	42.0
P125F9A2	125.0	30.0	60.0	90.00	128.00	35.00	35.00	11.00	6.00/5.00	55.0
P125F2K2–P	125.0	46.0	76.0	64.00	90.00	14.00	22.00	10.00	3.00	–
P130K2F2	130.0	55.0	95.0	102.00	144.00	47.50	60.00	11.00	6.00	–
P150F2	150.0	60.0	85.0	92.00	117.30	22.50	32.00	10.00	6.00	–
P150F4	150.0	60.0	85.0	120.00	150.00	33.00	43.00	14.00	8.00	–
P150F6	150.0	50.0	75.0	86.60	126.60	17.50	35.00	9 × 26	4.00	59.0
P150F11A2	150.0	36.0	60.0	163.50	189.60	40.15	39.70	10.60	5.00	–
P150F13A2	150.0	36.0	60.0	164.00	193.50	52.00	40.00	11.00	6.00	–
P150F14A2	150.0	36.0	60.0	164.00	193.50	52.00	40.00	11.00	6.00	–
P150F16A2	150.0	60.0	90.0	110.00	140.00	32.00	38.00	12.00	8.00	–
P150F18	150.0	60.0	85.0	120.00	150.00	33.00	43.00	M10	8.00	–
RF10150RA2	150.0	60.0	90.0	100.00	130.00	28.00	38.10	12.00	6.30	–
P150F21A2	150.0	26.0	45.7	100.40	129.40	58.50	44.45	10.90	6.40	–
P150F26A2	150.0	60.0	84.5	100.00	130.00	23.60	33.60	12.00	6.30	60.0
P150F32A2	150.0	60.0	90.0	100.00	128.00	28.00	28.60	12.00	6.30	55.0
P150F31A2	150.0	60.0	90.0	100.00	139.00	28.00	35.00	11.00	6.00	66.0
P152F	152.4	60.0	100.0	130.00	202.00	45.00	50.00	15.00	9.00	–
P152F4	152.4	60.0	100.0	110.00	140.00	32.00	38.00	15.00	6.00	65.0
P152F11	152.4	44.6	74.8	133.70	168.00	24.00	39.00	10.80	9.60/11.40	–
P152F16	152.4	63.5	178.5	184.15	241.15	47.65	63.50	20.70	12.70	–
P152F19	152.4	60.0	100.0	110.00	140.00	32.00	38.00	15.00	6.00	65.0
P152F20	152.4	–	76.2	120.65	172.30	41.30	50.80	17.50	9.50	–
P152F32K2	152.4	60.0	110.0	135.00	171.00	40.00	52.00	14.00	10.00	–
P152F33	152.4	60.0	110.0	158.00	194.00	40.00	52.00	14.00	10.00	–
P152F43	152.4	76.2	108.0	111.10	155.60	44.45	60.30	12.70	11.10	–
P152F50	152.4	63.5	102.0	101.60	135.00	37.50	65.00	13.50	6.00	–
P152F54	152.4	45.0	74.0	135.00	165.0	25.40	39.00	11.00	10.00	–
P152F56	152.4	50.8	76.2	101.60	133.40	28.60	38.10	11.10	8.00	–
RF6205MF6A2	152.4	60.0	100.0	120.00	158.00	38.00	45.00	15.00	8.00	85.0
P152F42K2F1	152.4	66.8	140.0	108.20	148.20	41.40	50.80	12.70	9.50	–
*P160F1	160.0	60.0	110.0	130.00	173.00	40.00	50.00	14.00	9.00	–

△ Attachments with 1 hole
△ *Befestigungslaschen mit einem Loch*

*Bushing chain: d_1 in the table indicate the external diameter of the bushing.
**Buchsenketten: In dieser Tabelle zeigt d_1 den Außendurchmesser der Buchsen.*

Förderketten mit Befestigungslaschen
Conveyor chains with attachments
Chaînes de manutention avec pattes d'attache

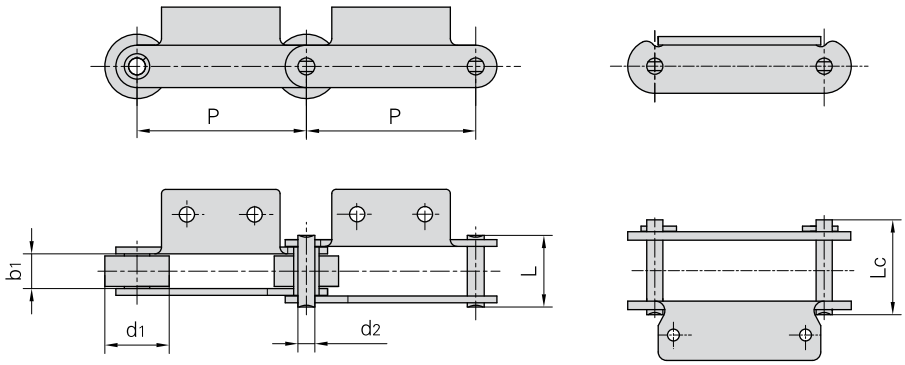

Donghua Chain No. *Donghua Ketten Nr.*	Pitch *Teilung*	Roller diameter *Rollen-durch-messer*	Width between inner plates *Innere Breite*	Pin diameter *Bolzen-durchmesser*	Pin length *Bolzen-länge*		Ultimate tensile strength *Min. Bruchkraft*	Average tensile strength *Durchschn. Bruchkraft*	Weight per meter *Gewicht*
	P	d_1 max	b_1 min	d_2 max	L max	Lc max	Q min	Q_0	q
	mm	mm	mm	mm	mm	mm	kN/LB	kN	kg/m
P160F3	160.0	48.0	25.00	14.85	62.50	–	120.0/27272	132.0	7.10
P160F5	160.0	60.0	33.00	14.27	64.00	72.0	150.0/34091	165.0	8.00
P160F8	160.0	40.0	20.00	11.00	50.00	–	55.0/12500	61.0	4.58
P160F18	160.0	50.0	34.00	20.00	–	88.0	100.0/22496	109.5	14.93
P160F25	160.0	70.0	25.00	14.25	55.50	60.5	100.0/22496	109.5	7.65
P160F26	160.0	50.0	29.90	13.94	–	60.0	105.0/23620	115.5	6.41
P185	185.0	50.8	30.60	14.27	62.80	67.5	70.0/15909	77.0	8.42
P200F6	200.0	50.0	37.00	16.00	77.50	82.5	170.0/38243	188.7	9.69
P200F7	200.0	40.0	27.00	11.10	57.00	61.0	124.6/28030	137.0	9.78
P200F8	200.0	65.0	37.00	16.00	86.50	–	170.0/38243	188.7	15.23
P200F13	200.0	80.0	51.00	20.00	106.00	–	180.0/40492	198.0	26.10
P200F15	200.0	40.1	51.40	19.10	109.50	–	213.0/47916	234.3	12.60
P200F23	200.0	65.0	36.50	16.00	–	86.5	170.0/38243	188.7	11.57
P200F22	200.0	90.0	48.00	16.00	–	99.0	170.0/38243	188.7	19.60
P200F26A2	200.0	50.0	37.00	16.00	85.50	90.5	170.0/38243	188.7	11.08
P200F30	200.0	65.0	38.00	18.00	–	79.5	120.0/26995	130.8	10.80
RF12200A2–F–200	200.0	65.0	37.10	15.90	–	86.5	279.0/62763	306.9	14.20
P203.2F6	203.2	88.9	45.97	25.40	–	116.3	489.0/110005	528.1	37.00
RF10250RA2	250.0	50.8	30.00	14.50	69.00	–	113.0/25420	124.3	6.47
P250F25	250.0	50.0	30.00	14.00	–	81.3	170.0/38243	188.7	8.40

Förderketten mit Befestigungslaschen
Conveyor chains with attachments
Chaînes de manutention avec pattes d'attache

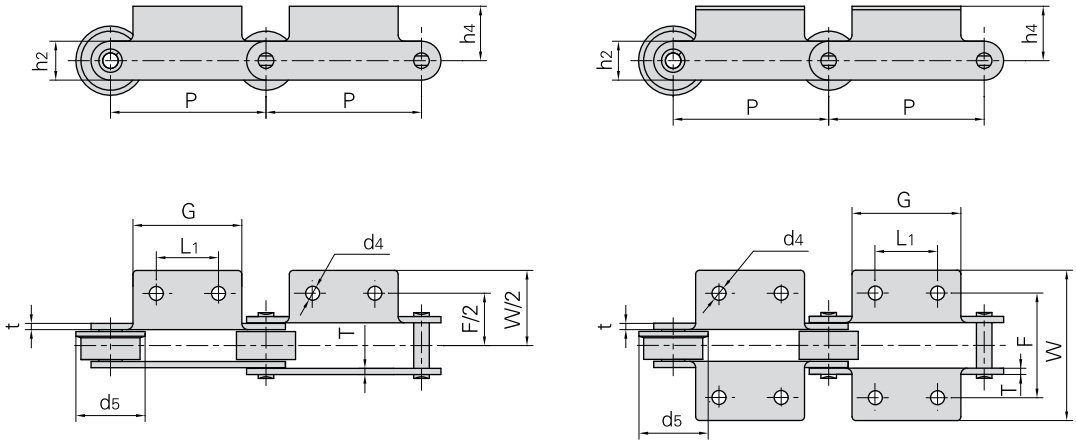

Donghua Chain No. *Donghua Ketten Nr.*	P	L_1	G	F	W	h_4	h_2	d_4	t/T	d_5
	mm	mm	mm	mm	mm	mm	mm	mm	mm	mm
P160F3	160.0	49.0	70.0	83.00	117.0	32.5	35.0	8.5	6.0	–
P160F5	160.0	35.0	70.0	110.00	166.0	38.7	40.0	14.0	5.6	–
P160F8	160.0	80.5	133.0	56.00	100.0	16.0	32.0	8.33x13.30	4.5	–
P160F18	160.0	60.0	110.0	110.00	153.0	40.0	50.0	15.0	9.0	–
P160F25	160.0	–	120.0	70.00	89.0	27.5	36.0	10.0	5.6	–
P160F26	160.0	30.0	50.0	94.00	124.0	35.0	40.0	10.0	4.0	65.0
P185	185.0	60.0	120.0	110.00	140.0	32.0	38.0	15.0	6.0	65.0
P200F6	200.0	81.5	120.0	120.00	150.0	33.0	43.0	14.0	8.0	–
P200F7	200.0	81.5	120.0	92.00	122.0	22.0	32.0	10.0	6.0	–
P200F8	200.0	80.0	120.0	200.00	238.0	38.0	43.0	15.0	8.0	80.0
P200F13	200.0	110.0	150.0	152.00	204.0	43.0	50.0	13.0	9.0	–
P200F15	200.0	80.0	120.0	150.00	200.0	43.0	50.8	15.0	9.5	–
P200F23	200.0	80.0	120.0	120.00	170.0	38.0	43.0	15.0	8.0	–
P200F22	200.0	80.0	120.0	212.00	250.0	38.0	43.0	15.0	8.0	100.0
P200F26A2	200.0	81.5	120.0	120.00	154.0	33.0	43.0	14.0	10.0	–
P200F30	200.0	65.0	100.0	119.00	159.0	30.0	50.0	12.5/18.5	6.0	–
RF12200A2-F-200	200.0	80.0	120.0	120.00	158.0	38.0	44.5	15.0	7.9	80.0
P203.2F6	203.2	114.3	152.4	131.83	192.0	54.1	69.8	17.5	12.7	–
RF10250RA2	250.0	80.0	120.0	100.00	130.0	28.0	38.1	12.0	6.3	–
P250F25	250.0	60.0	93.0	108.00	143.6	30.0	38.0	10.0	8.0	–

Förderketten mit Befestigungslaschen
Conveyor chains with attachments
Chaînes de manutention avec pattes d'attache

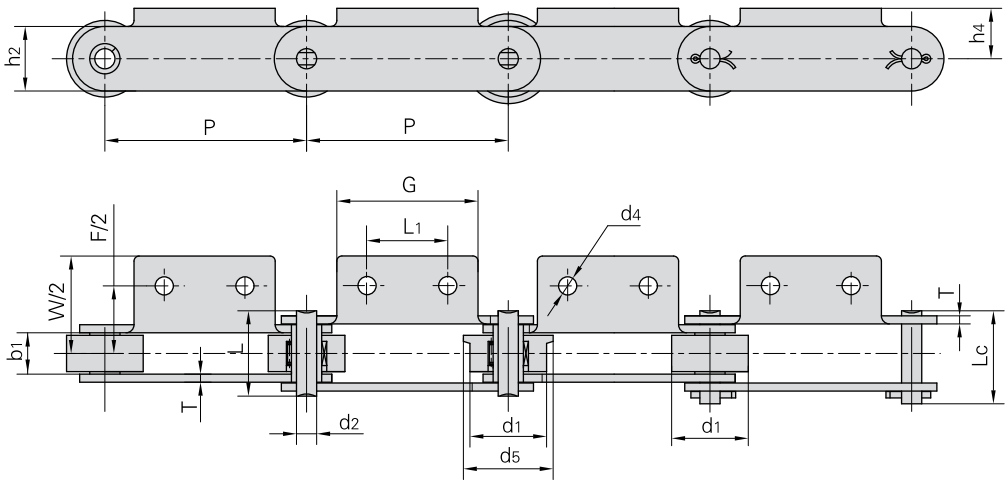

Donghua Chain No. *Donghua Ketten Nr.*	Pitch *Teilung*	Roller diameter *Rollen-durchmesser*	Width between inner plates *Innere Breite*	Pin diameter *Bolzen-durchmesser*	Pin length *Bolzen-länge*		Ultimate tensile strength *Min. Bruchkraft*	Average tensile strength *Durchschn. Bruchkraft*	Weight per meter *Gewicht*
	P	d_1 max	b_1 min	d_2 max	L max	Lc max	Q min	Q_0	q
	mm	mm	mm	mm	mm	mm	kN/LB	kN	kg/m
M56F4–P–100	100.0	38.0	20.5	10.00	42.3	46.1	56.0/12727	62.0	4.30
M56F7–P–100	100.0	38.0	17.0	10.00	38.8	42.6	56.0/12727	62.0	4.84
M56F9–P–100	100.0	38.0	20.5	10.00	46.3	50.1	88.2/20045	97.0	5.60
P100	100.0	50.0	29.9	13.94	60.0	–	160.0/36364	176.0	9.27
P100F4A2–F1	100.0	40.0	22.0	11.30	–	53.5	65.0/14612	71.5	5.52
P160	160.0	50.0	29.9	13.94	60.0	–	160.0/36364	176.0	7.23
P200F28	200.0	65.0	37.1	16.00	77.5	85.5	160.0/36364	176.0	14.10
P200F31	200.0	80.0	37.1	16.00	77.5	85.5	160.0/36364	176.0	18.10
P300	300.0	80.0	45.0	23.81	95.5	103.0	300.0/68181	320.0	24.32
P350	350.0	80.0	45.0	23.81	95.5	103.0	300.0/68181	320.0	23.60
P400F1	400.0	80.0	45.0	23.81	95.5	103.0	300.0/68181	320.0	22.67

Donghua Chain No. *Donghua Ketten Nr.*	L_1	G	F	W	h_4	h_2	d_4	T	d_5
	mm	mm	mm	mm	mm	mm	mm	mm	mm
M56F4–P–100	40.0	70.0	68.5	98.50	25.0	25.0	9.0	4.0	44.5
M56F7–P–100	40.0	70.0	71.5	92.00	55.0	25.0	6.5	4.0	45.0
M56F9–P–100	40.0	70.0	67.5	96.58	25.0	32.0	9.0	5.0	44.5
P100	40.0	65.0	98.0	128.00	35.0	40.0	10.0	4.0	65.0
P100F4A2–F1	40.0	65.0	70.0	94.00	22.0	32.0	10.0	4.5	50.0
P160	85.0	115.0	94.0	124.00	35.0	40.0	10.0	4.0	65.0
P200F28	80.0	120.0	120.0	158.00	63.0	44.5	12.0	8.0	80.0
P200F31	80.0	140.0	120.0	158.00	85.0	44.5	M10	8.0	100.0
P300	200.0	250.0	150.0	190.00	105.0	60.0	13.0	10.0	100.0
P350	250.0	300.0	150.0	190.00	105.0	60.0	13.0	10.0	100.0
P400F1	300.0	350.0	150.0	190.00	105.0	60.0	15.0	10.0	100.0

Förderketten mit Befestigungslaschen
Conveyor chains with attachments
Chaînes de manutention avec pattes d'attache

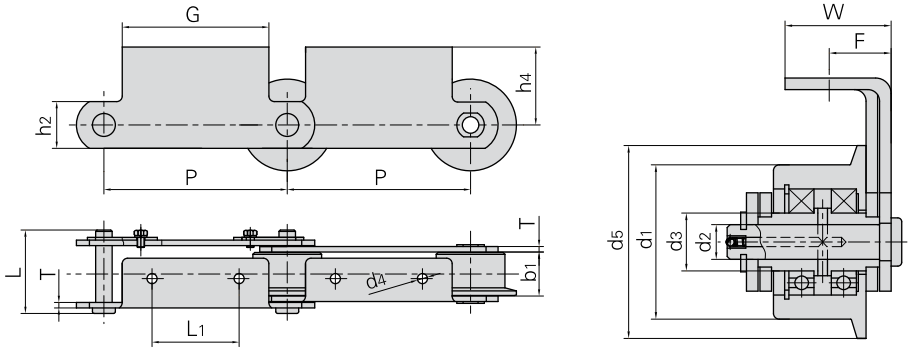

Donghua Chain No. *Donghua Ketten Nr.*	Pitch *Teilung*	Roller diameter *Rollen-durch-messer*		Width between inner plates *Innere Breite*	Pin diameter *Bolzen-durch-messer*	Pin length *Bolzen-länge*	Bush diameter *Buchsen-durch-messer*	Plate depth *Laschen-höhe*	Plate thickness *Laschen-dicke*	Ultimate tensile strength *Min. Bruchkraft*
	P	d_1 max	d_5 max	b_1 min	d_2 max	L max	d_3 max	h_2 max	T max	Q min
	mm	mm	mm	mm	mm	mm	mm	mm	mm	kN/LB
M160F6–F–200	200.0	80.0	98.0	47.5	18.0	91.0	30.0	51.0	6.0	160.0/35993
M160F7–F–200	200.0	80.0	98.0	47.5	18.0	99.0	30.0	51.0	8.0	160.0/35993
M224F9–F–200	200.0	90.0	105.0	44.5	26.0	112.0	35.0	60.0	8.0	224.0/50390

Donghua Chain No. *Donghua Ketten Nr.*	P	L_1	G	F	W	h_4	d_4
	mm	mm	mm	mm	mm	mm	mm
M160F6–F–200	200.0	95.0	160.0	32.0	55.0	85.0	11.0
M160F7–F–200	200.0	95.0	160.0	36.0	59.0	85.0	11.0
M224F9–F–200	200.0	120.0	160.0	35.0	50.0	85.0	12.0

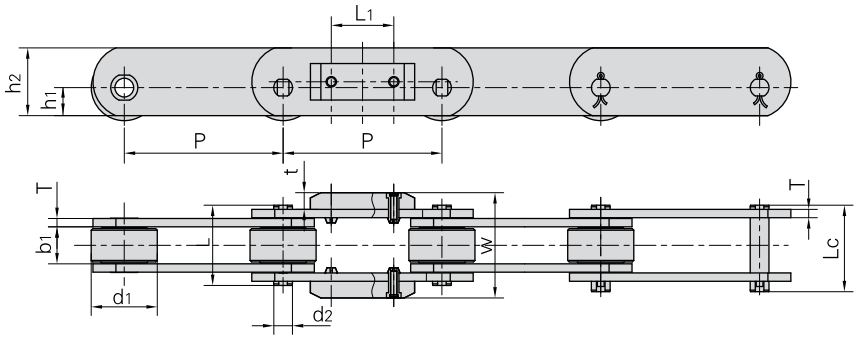

Donghua Chain No. *Donghua Ketten Nr.*	P	L_1	W	t
	mm	mm	mm	mm
P152F13	152.4	60.0	101.0	16.0

Donghua Chain No. *Donghua Ketten Nr.*	Pitch *Teilung*	Roller diameter *Rollen-durchmesser*	Width between inner plates *Innere Breite*	Pin diameter *Bolzen-durchmesser*	Pin length *Bolzen-länge*		Plate depth *Laschen-höhe*		Plate thickness *Laschen-dicke*	Ultimate tensile strength *Min. Bruchkraft*
	P	d_1 max	b_1 min	d_2 max	L max	Lc max	h_1 max	h_2 max	T max	Q min
	mm	mm	mm	mm	mm	mm	mm	mm	mm	kN/LB
P152F13	152.4	63.4	35.0	18.0	77.0	83.0	26.9	65.0	8.0	160.0/36364

Förderketten mit Befestigungslaschen
Conveyor chains with attachments
Chaînes de manutention avec pattes d'attache

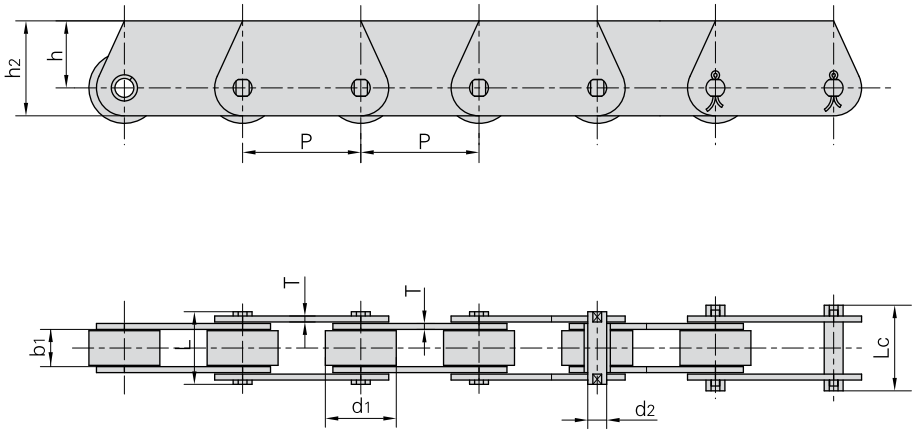

Donghua Chain No. *Donghua Ketten Nr.*	Pitch *Teilung*	Roller diameter *Rollen-durch-messer*	Width between inner plates *Innere Breite*	Pin diameter *Bolzen-durch-messer*	Pin length *Bolzen-länge*		Plate depth *Laschen-höhe*		Plate thickness *Laschen-dicke*	Ultimate tensile strength *Min. Bruchkraft*	Weight per meter *Gewicht*
	P	d_1 max	b_1 min	d_2 max	L max	Lc max	h max	h_2 max	T max	Q min	q
	mm	mm	mm	mm	mm	mm	mm	mm	mm	kN/LB	kg/m
P31.75F1	31.75	19.05	9.80	5.08	19.2	22.5	18.0	25.5	1.60	20.0/4545	1.48
P63F10	63.00	42.00	23.00	11.11	50.0	53.0	29.4	44.4	4.80	80.0/17997	8.32
P100F59	100.00	40.00	25.00	14.50	61.0	67.5	23.0	40.0	6.30	100.0/22496	7.98
P101.6F10	101.60	50.00	30.00	14.27	64.0	68.5	30.0	50.0	6.40	180.0/40909	11.56
P152F49	152.40	63.50	34.00	15.60	–	82.0	38.1	65.0	8.00	160.0/35993	16.30
P160F2	160.00	60.00	38.00	20.00	–	80.0	36.0	60.0	6.00	190.0/43181	12.57
MT18F1–S–50	50.00	18.00	11.50	5.72	25.5	28.2	10.0	17.5	2.50	18.0/4050	1.36
MT18F3–P–50	50.00	25.00	11.50	5.72	24.0	26.4	16.5	25.0	2.03	18.0/4050	2.00
MT28F1–P–63	63.00	30.00	18.00	7.00	34.0	37.5	20.0	30.0	3.00	28.0/6300	3.40
MT40F–P–50	50.00	31.00	15.00	10.00	36.0	39.0	17.5	30.0	4.00	40.0/9000	4.33
MT40F1–P–63	63.00	30.00	16.00	8.50	37.0	40.0	19.0	30.0	4.00	40.0/9000	3.90
MT80F2–P–63	63.00	30.00	25.00	7.00	45.2	48.7	20.0	30.0	4.00	35.0/7875	4.58
MT40F3–P–80	80.00	36.00	20.00	8.50	42.5	46.5	22.5	35.0	4.00	40.0/9000	4.81
MT56F1–B–100	100.00	15.00	24.00	10.00	46.0	49.5	35.0	50.0	4.00	56.0/12600	3.38
MT80F2–P–100	100.00	50.00	28.00	14.35	55.0	59.5	32.5	51.5	5.00	120.0/26995	9.56

Förderketten mit Befestigungslaschen
Conveyor chains with attachments
Chaînes de manutention avec pattes d'attache

Conveyor chains for coal yards
P315F11 Förderketten für den Kohlenlagerplatz

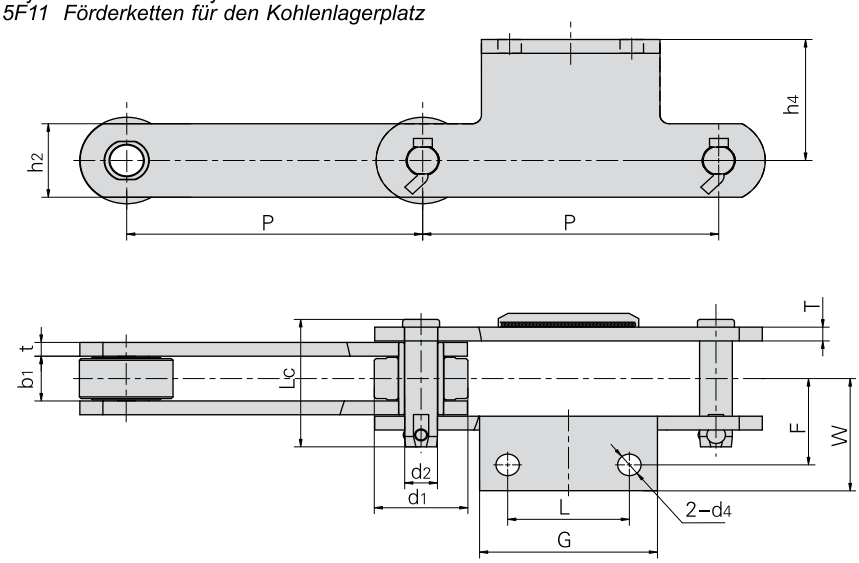

Donghua Chain No. *Donghua Ketten Nr.*	Pitch *Teilung*	Roller diameter *Rollen-durch-messer*	Width between inner plates *Innere Breite*	Pin diameter *Bolzen-durch-messer*	Pin length *Bolzen-länge*	Plate thickness *Laschen-dicke*	Ultimate tensile strength *Min. Bruchkraft*	Average tensile strength *Durchschn. Bruchkraft*
	P	d_1 max	b_1 min	d_2 max	Lc max	t/T	Q min	Q_0
	mm	mm	mm	mm	mm	mm	kN	kN
P315F11	315	100	52	35	148	16	800	900

Donghua Chain No. *Donghua Ketten Nr.*	P	L	G	F	W	h_4	h_2	d_4
	mm	mm	mm	mm	mm	mm	mm	mm
P315F11	315	130	190	100	130	140	85	25

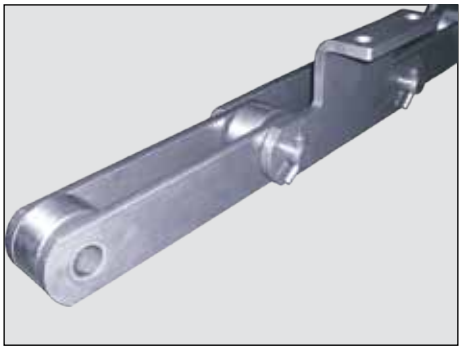

Förderketten mit Befestigungslaschen
Conveyor chains with attachments
Chaînes de manutention avec pattes d'attache

P315 conveyor chain
P315 Förderketten

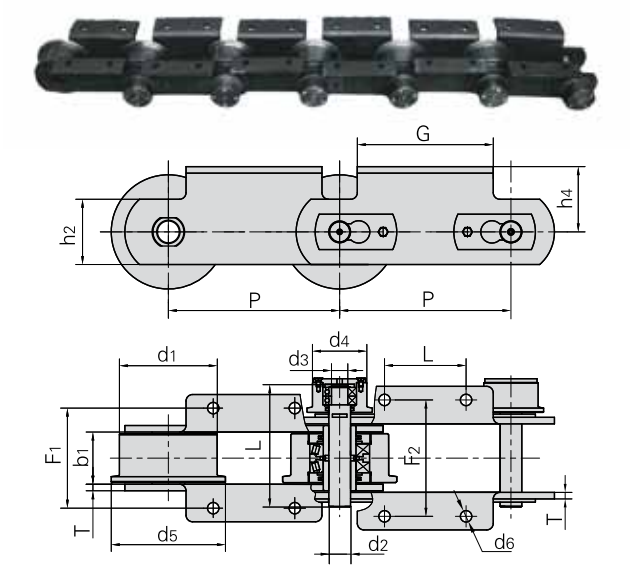

Donghua Chain No. *Donghua Ketten Nr.*	P	L	G	F_1	F_2	h_4	h_2	d_6	T
	mm	mm	mm	mm	mm	mm	mm	mm	mm
P315	315	150.0	250.0	180.0	206.0	120.0	120.0	21.0	12.0

Donghua Chain No. *Donghua Ketten Nr.*	Pitch *Teilung*	Roller diameter *Rollen-durchmesser*			Width between inner plates *Innere Breite*	Pin diameter *Bolzen-durch-messer*		Pin length *Bolzen-länge*	Ultimate tensile strength *Min. Bruchkraft*	Average tensile strength *Durchschn. Bruchkraft*
	P	d_1 max	d_4 max	d_5 max	b_1 min	d_2 max	d_3 max	L_1 max	Q min	Q_0
	mm	mm	mm	mm	mm	mm	mm	mm	kN/LB	kN
P315	315	180.0	100.0	210.0	90.0	40.0	30.0	217.0	100.0/22727	110.0

Sonderketten für die Abwasserentsorgung
Steel chains for sewage disposal
Chaînes spéciales pour l'évacuation des eaux usées

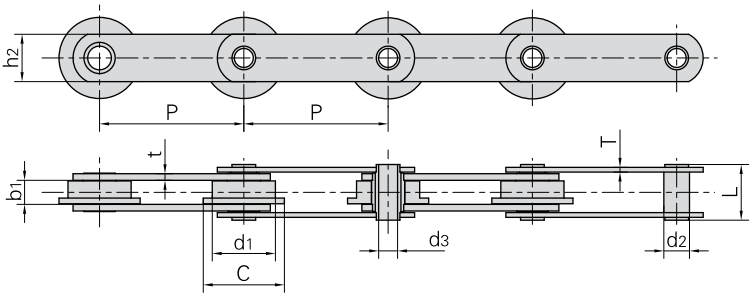

Donghua Chain No. *Donghua Ketten Nr.*	Pitch *Teilung*	Width between inner plates *Innere Breite*	Roller diameter *Rollen-durch-messer*		Pin diameter *Bolzen-durch-messer*		Pin length *Bolzen-länge*	Plate depth *Laschen-höhe*	Plate thickness *Laschen-dicke*		Ultimate tensile strength *Min. Bruchkraft*	Average tensile strength *Durchschn. Bruchkraft*	Weight per meter *Gewicht*
	P	b_1 min	d_1 max	C max	d_2 max	d_3 mon	L max	h_2 max	T max	t max	Q min	Q_0	q
	mm	mm	mm	mm	mm	mm	mm	mm	mm	mm	kN/LB	kN	kg/m
W152	152.4	25.40	66.7	85.7	27.1	20.0	58.8	50.0	5.0	7.0	110.0/25000	122.1	10.78

Sonderförderketten
Special conveyor chains
Chaînes spéciales de manutention

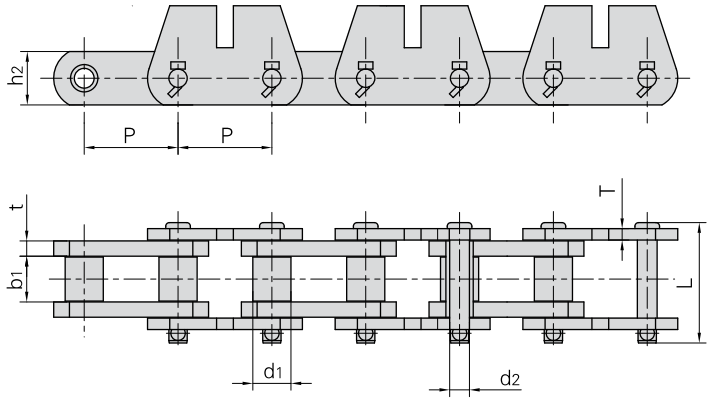

Donghua Chain No. *Donghua Ketten Nr.*	Pitch *Teilung*	Roller diameter *Rollen-durch-messer*	Width between inner plates *Innere Breite*	Pin diameter *Bolzen-durch-messer*	Pin length *Bolzen-länge*	Inner plate depth *Laschen-höhe*	Plate thickness *Laschen-dicke*	Ultimate tensile strength *Min. Bruchkraft*	Average tensile strength *Durchschn. Bruchkraft*	Weight per meter *Gewicht*
	P	d_1 max	b_1 min	d_2 max	L max	h_2 max	t/T max	Q min	Q_0	q
	mm	mm	mm	mm	mm	mm	mm	kN/LB	kN	kg/m
P78.11F10	78.105	31.75	38.1	16.46	102.0	44.45	12.7/9.5	333.4/75000	350.0	16.73
P101.6F28	101.600	38.10	50.8	17.48	122.0	44.45	12.7	266.7/60000	293.3	21.66
P152F18	152.400	69.85	76.2	25.40	152.0	63.50	12.7	500.0/112480	650.0	43.23
P152F24	152.400	69.85	76.2	25.40	152.0	63.50	12.7	565.0/127100	650.0	38.38

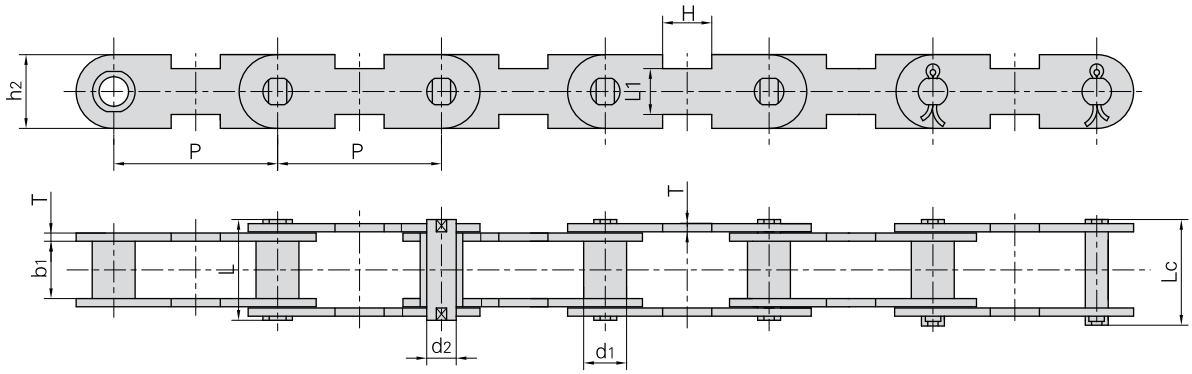

Donghua Chain No. *Donghua Ketten Nr.*	Pitch *Teilung*	Bush diameter *Buchsen-durch-messer*	Width between inner plates *Innere Breite*	Pin diameter *Bolzen-durch-messer*	Pin length *Bolzen-länge*		Inner plate depth *Laschen-höhe*	Plate thickness *Laschen-dicke*	Attachment dimension *Befestigungs-laschen-abmessungen*		Ultimate tensile strength *Min. Bruchkraft*	Weight per meter *Gewicht*
	P	d_1 max	b_1 min	d_2 max	L max	Lc max	h_2 max	T max	H	L_1	Q min	q
	mm	mm	mm	mm	mm	mm	mm	mm	mm	mm	kN/LB	kg/m
P100F49	100.0	20.0	25.0	14.0	51.5	55.0	35.0	5.0	30.0	28.0	90.0/20250	4.02
P100F54	100.0	26.0	35.0	18.0	65.5	71.0	45.0	6.0	30.0	28.0	100.0/22500	6.90

Kardanketten für Kreisförderer
Universal movement conveyor chains
Chaînes à maillons cardans pour convoyeur circulaire

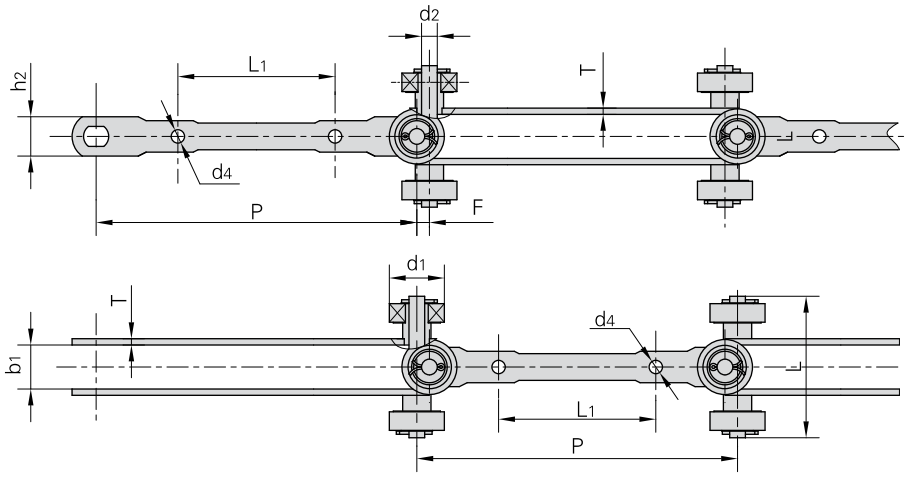

Donghua Chain No. *Donghua Ketten Nr.*	Pitch *Teilung*	Roller diameter *Rollen-durch-messer*	Width between inner plates *Innere Breite*	Pin diameter *Bolzen-durch-messer*	Pin lenght *Bolzen-länge*	plate dimension *Laschen-abmessungen*		Attachment dimension *Befestigungs-laschen-abmessungen*			Ultimate tensile strength *Min. Bruchkraft*
	P	d_1 max	b_1 min	d_2 max	L max	h_2 max	T max	L_1	d_4	F	Q min
	mm	mm	mm	mm	mm	mm	mm	mm	mm	mm	kN/LB
P210	204.0	35.0	27.5	10.0	90.0	25.0	4.0	100.0	8.5	8.0	50.0/11364
SJ406S–50	203.2	35.0	27.5	10.0	90.0	25.0	4.0	100.0	8.5	11.0	50.0/11364

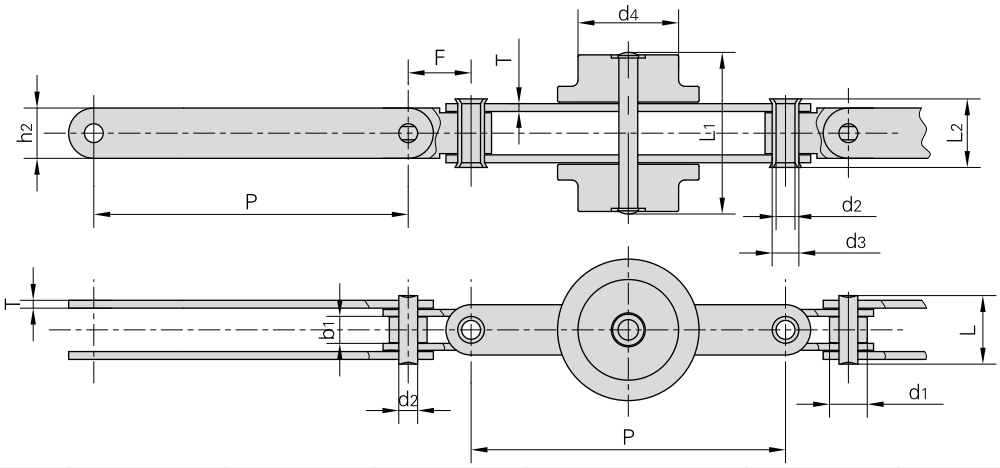

Donghua Chain No. *Donghua Ketten Nr.*	Pitch *Teilung*	Roller diameter *Rollen-durch-messer*		Width between inner plates *Innere Breite*	Pin diameter *Bolzen-durch-messer*		Pin lenght *Bolzen-länge*			plate dimension *Laschen-abmessungen*		Attachment dimension *Befestigungs-laschen-abmessungen*	Ultimate tensile strength *Min. Bruchkraft*
	P	d_1 max	d_4 max	b_1 min	d_2	d_3	L max	L_1 max	L_2 max	h_2 max	T max	F	Q min
	mm	mm	mm	mm	mm	mm	mm	mm	mm	mm	mm	mm	kN/LB
P100F11	100.0	12.0	32.0	8.6	6.0	8.5	22.0	53.0	22.0	16.0	2.5	20.0	20.0/4545

Kardanketten für Kreisförderer
Universal movement conveyor chains
Chaînes à maillons cardans pour convoyeur circulaire

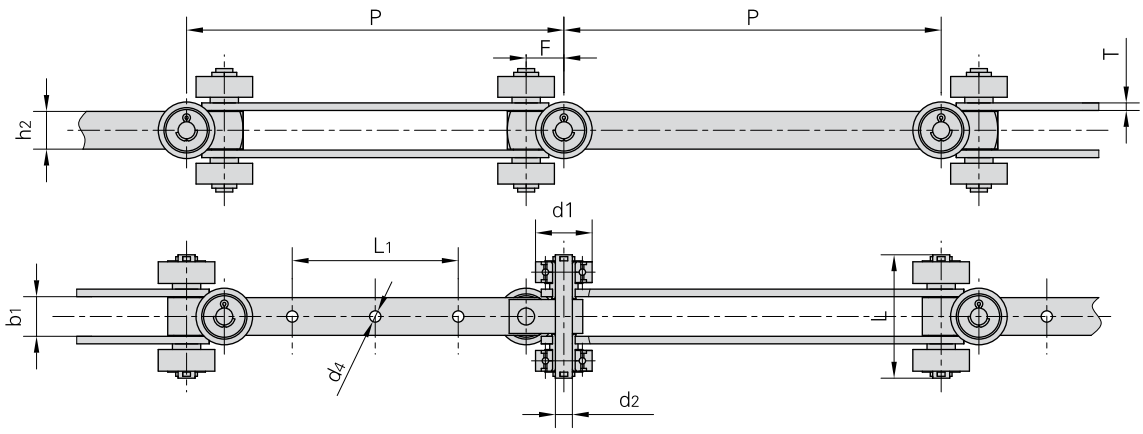

Donghua Chain No. *Donghua Ketten Nr.*	Pitch *Teilung*	Roller diameter *Rollen-durch-messer*	Width between inner plates *Innere Breite*	Pin diameter *Bolzen-durch-messer*	Pin lenght *Bolzen-länge*	plate dimension *Laschen-abmessungen*		Attachment dimension *Befestigungs-laschen-abmessungen*			Ultimate tensile strength *Min. Bruchkraft*
	P	d_1 max	b_1 min	d_2 max	L max	h_2 max	T max	L1	d_4	F	Q min
	mm	mm	mm	mm	mm	mm	mm	mm	mm	mm	kN/LB
SJ400–40	200.0	30.0	20.0	9.0	65.0	20.0	3.0	88.0	6.44	20.0	15.0/3374
SJ400–60	200.0	35.0	21.0	10.0	64.5	20.0	4.0	88.0	6.50	20.0	60.0/13497
SJ400–100	200.0	40.0	26.0	14.0	75.0	30.0	4.0	88.0	10.00	25.0	100.0/22495
SJ405S–60	203.2	47.0	30.0	14.0	95.0	30.0	4.0	76.2	8.40	16.5	50.0/11247

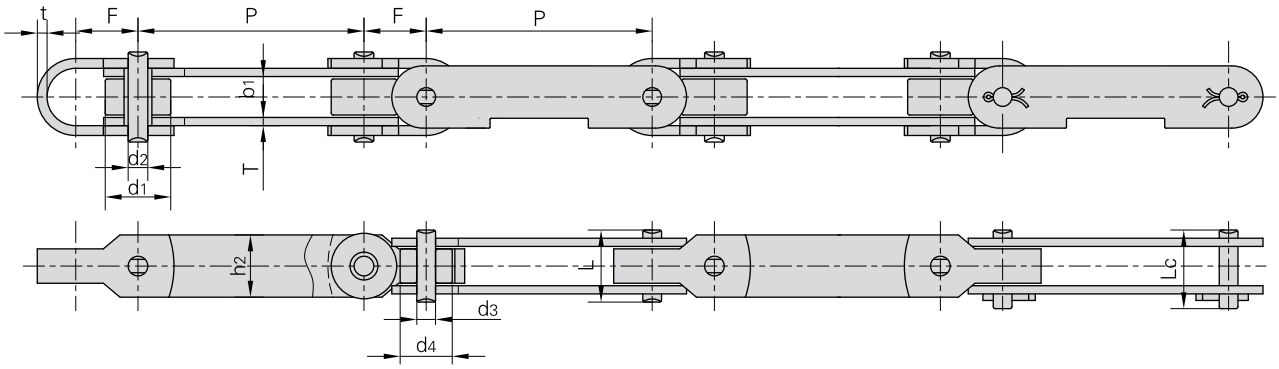

Donghua Chain No. *Donghua Ketten Nr.*	Pitch *Teilung*	Roller diameter *Rollen-durch-messer*		Width between inner plates *Innere Breite*	Pin diameter *Bolzen-durch-messer*		Pin lenght *Bolzen-länge*		plate dimension *Laschen-abmessungen*		Attachment dimension *Befestigungs-laschen-abmessungen*		Ultimate tensile strength *Min. Bruchkraft*
	P	d_1 max	d_4 max	b_1 min	d_2	d_3	L max	Lc max	h_2 max	T max	F	t	Q min
	mm	mm	mm	mm	mm	mm	mm	mm	mm	mm	mm	mm	kN/LB
P69F2	69.0	20.0	15.9	8.6	6.0	5.72	22.0	24.0	19.0	2.5	19.0	3.0	20.0/4545

Hebezeugketten
Conveyor chains for hoisting
Chaînes de levage

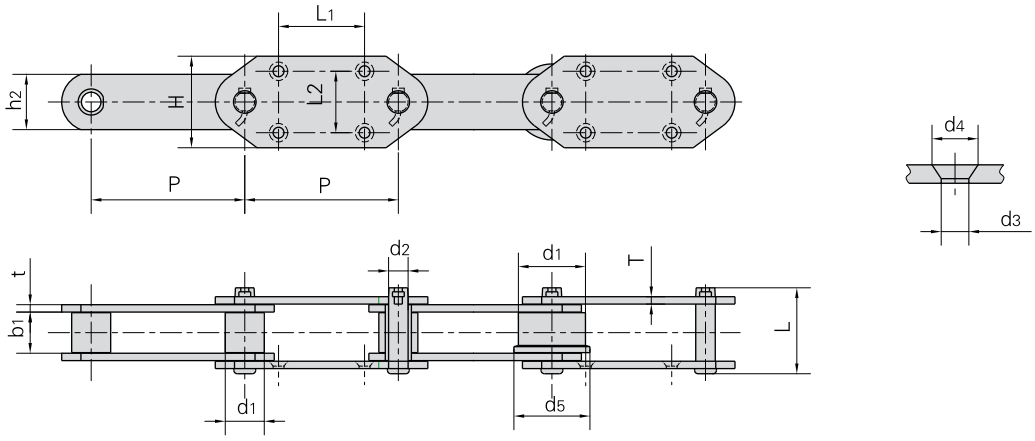

Donghua Chain No. *Donghua Ketten Nr.*	P	H	L_1	L_2	d_3	d_4
	mm	mm	mm	mm	mm	mm
P95	95.0	95.0	50.0	70.0	12.0	21.0
RF10150RF1	150.0	100.0	75.0	70.0	11.0	20.0
P152F41	152.4	110.0	75.0	70.0	14.5	25.0
RF17200MF1–G–4	200.0	125.0	100.0	80.0	18.0	33.0
RF17200MF2–G–4	200.0	120.0	100.0	80.0	15.0	26.0
P250F6	250.0	150.0	140.0	100.0	17.7	30.0
P300F1	300.0	180.0	170.0	120.0	22.0	39.0

Donghua Chain No. *Donghua Ketten Nr.*	Pitch *Teilung*	Roller diameter *Rollen-durch-messer*		Width between inner plates *Innere Breite*	Pin diameter *Bolzen-durch-messer*	Pin length *Bolzen-länge*	Plate depth *Laschen-höhe*	Plate thickness *Laschen-dicke*	Ultimate tensile strength *Min. Bruchkraft*	Average tensile strength *Durchschn. Bruchkraft*	Weight per meter *Gewicht*
	P	d_1 max	d_5	b_1 min	d_2 max	L max	h_2 max	t/T max	Q min	Q_0	q
	mm	mm	mm	mm	mm	mm	mm	mm	kN/LB	kN	kg/m
P95	95.0	50.8	58.0	30.0	13.5	70.0	38.0	6.0	75.0/16871	82.5	9.93
RF10150RF1	150.0	50.0	60.0	30.0	14.5	69.0	38.1	8.0/6.3	200.0/44992	220.0	8.64
P152F41	152.4	38.1	–	36.0	15.5	90.0	50.0	8.0	150.0/33743	165.0	11.91
RF17200MF1–G–4	200.0	44.5	–	51.4	19.1	120.0	60.0	10.0	245.0/55114	269.5	17.60
RF17200MF2–G–4	200.0	44.5	–	51.4	19.1	109.5	50.8	9.5	213.0/47916	243.0	15.10
P250F6	250.0	63.5	–	67.0	31.8	146.0	90.0	12.0	450.0/101230	495.0	31.70
P300F1	300.0	70.0	–	75.0	35.0	174.0	100.0	16.0	1065.0/239580	1118.0	47.47

Geschweißte Förderketten
Welded conveyor chains
Chaînes de manutention soudées

P160F7

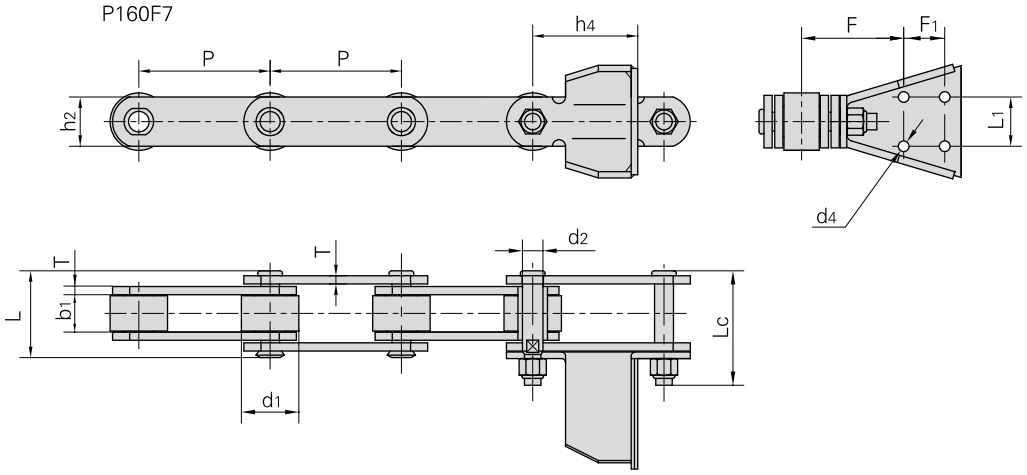

P125F6

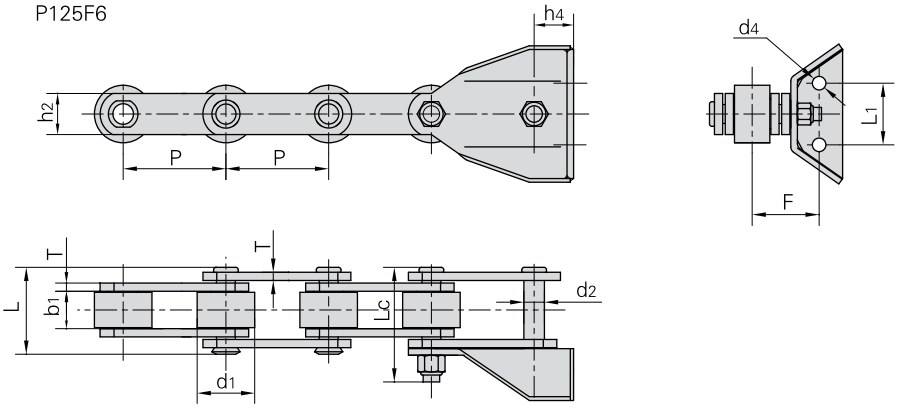

Donghua Chain No. *Donghua Ketten Nr.*	P	L_1	F	d_4	h_4	F_1
	mm	mm	mm	mm	mm	mm
P125F6	125.0	75.0	77.5	16.5	44.0	
P160F7	160.0	60.0	119.5	13.0	130.0	50.0

Donghua Chain No. *Donghua Ketten Nr.*	Pitch *Teilung*	Roller diameter *Rollen-durch-messer*	Width between inner plates *Innere Breite*	Pin diameter *Bolzen-durch-messer*	Pin length *Bolzen-länge*		Plate depth *Laschen-höhe*	Plate thickness *Laschen-dicke*	Ultimate tensile strength *Min. Bruchkraft*
	P	d_1 max	b_1 min	d_2 max	L max	Lc max	h_2 max	T max	Q min
	mm	mm	mm	mm	mm	mm	mm	mm	kN/LB
P125F6	125.0	70.0	45.0	20.0	90.0	122.0	50.0	8.0	250/56818
P160F7	160.0	70.0	45.0	25.0	99.0	136.0	60.0	10.0	400/90908

Geschweißte Förderketten
Welded conveyor chains
Chaînes de manutention soudées

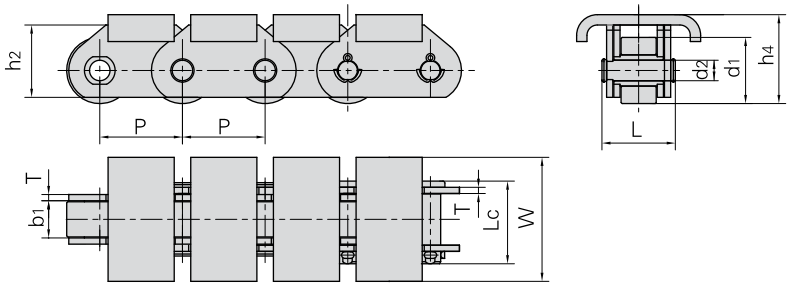

Donghua Chain No. *Donghua Ketten Nr.*	Pitch *Teilung*	Roller diameter *Rollen-durch-messer*	Width between inner plates *Innere Breite*	Pin diameter *Bolzen-durch-messer*	Pin length *Bolzen-länge*		Plate depth *Laschen-höhe*	Plate thickness *Laschen-dicke*	Attachment dimension *Befestigungs-laschen-abmessungen*		Ultimate tensile strength *Min. Bruchkraft*	Weight per meter *Gewicht*
	P	d_1 max	b_1 min	d max	L max	Lc max	h_2 max	T max	W	h_4	Q min	q
	mm	mm	mm	mm	mm	mm	mm	mm	mm	mm	kN/LB	kg/m
P40F3	40.0	32.0	18.0	10.00	36.1	40.2	35.0	3.0	60.0	43.00	40.0/9091	7.27
P40F5	40.0	32.0	18.0	10.00	36.1	40.2	35.0	3.0	59.5	42.00	40.0/9091	7.16
P63F6	63.0	48.0	25.0	14.00	52.0	57.0	45.0	5.0	130.0	56.50	63.0/14172.3	16.22
P63F9	63.0	48.0	25.0	14.00	52.0	57.0	45.0	5.0	80.0	56.50	63.0/14172.3	13.66
P76.2F19	76.2	38.1	27.5	11.10	59.1	63.5	35.0	6.4	63.5	50.05	150/33721	11.35
P76.2F27	76.2	47.6	19.0	19.05	69.5	77.0	50.0	10.0	82.0	78.80	90/20232	15.47

Rollenketten für Textilmaschinen
Roller chains for textile machinery
Chaînes à rouleaux pour machines textiles

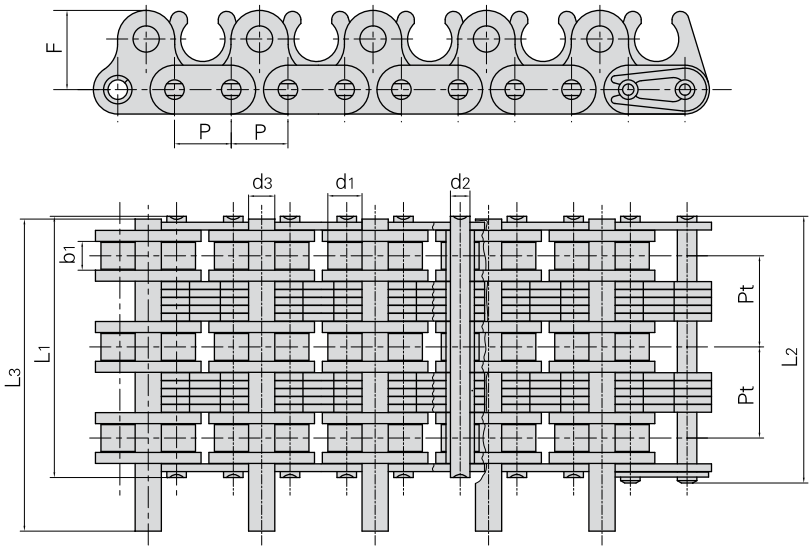

Donghua Chain No. *Donghua Ketten Nr.*	Pitch *Teilung*	Roller diameter *Rollen-durch-messer*	Width between inner plates *Innere Breite*	Pin diameter *Bolzen-durch-messer*		Pin length *Bolzen-länge*			Attachment dimension *Befestigungs-laschen-abmessungen*	Transverse pitch *Mitten-abstand*	Ultimate tensile strength *Min. Bruchkraft*	Weight per meter *Gewicht*
	P	d_1 max	b_1 min	d_2 max	d_3 max	L_1 max	L_2 max	L_3 max	F	Pt	Q min	q
	mm	mm	mm	mm	mm	mm	mm	mm	mm	mm	kN/LB	kg/m
06BF20	9.525	6.35	4.6	3.28	4.45	43.75	44.85	52.4	13.0	15.0	24.9/5682	2.77

Rollenketten für den Folientransport
Roller chains for folio transport (Gripper)
Chaînes à rouleaux pour transport de feuillard

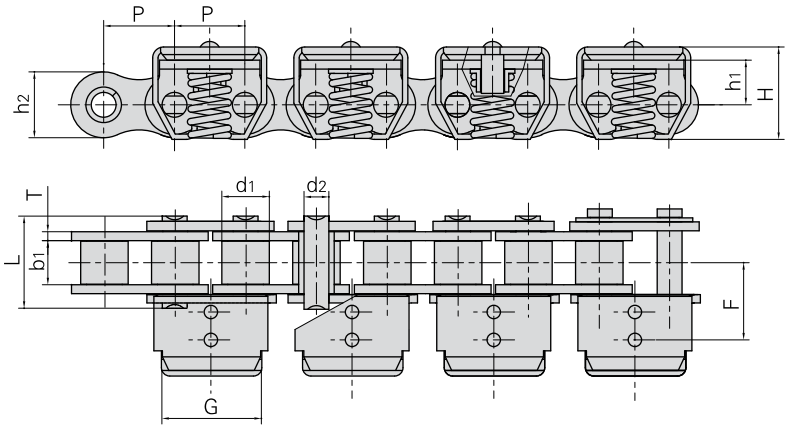

Donghua Chain No. *Donghua Ketten Nr.*	Pitch *Teilung*	Roller diameter *Rollen-durch-messer*	Width between inner plates *Innere Breite*	Pin diameter *Bolzen-durch-messer*	Pin length *Bolzen-länge*	Attachment dimension *Befestigungs-laschen-abmessungen*					Ultimate tensile strength *Min. Bruchkraft*	Weight per meter *Gewicht*
	P	d_1 max	b_1 min	d_2 max	L max	h_2 max	F	h_1	H	T	Q min	q
	mm	mm	mm	mm	mm	mm	mm	mm	mm	mm	kN/LB	kg/m
08BSSF32	12.7	8.51	7.75	4.45	16.7	11.8	13.8	8.0	16.5	1.6	12.0/2727	1.14

Rollenketten für die Papierindustrie
Support chains for paper mill
Chaînes à rouleaux pour l'industrie papetière

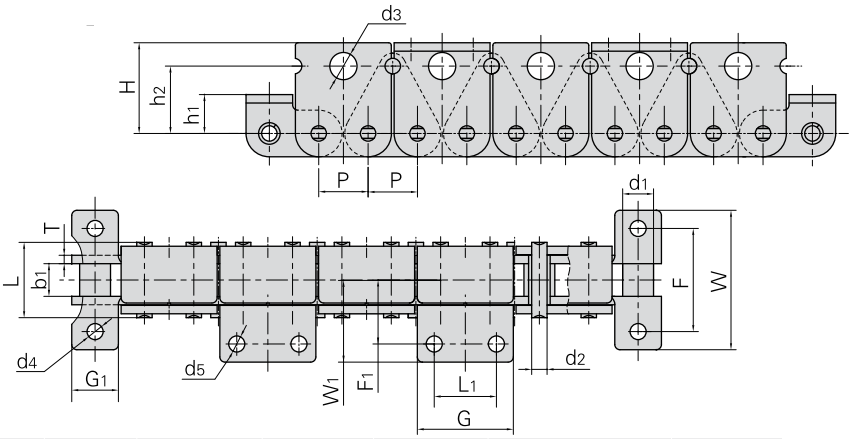

Donghua Chain No. *Donghua Ketten Nr.*	Pitch *Teilung*	Roller diameter *Rollen-durch-messer*	Width between inner plates *Innere Breite*	Pin diameter *Bolzen-durch-messer*	Pin length *Bolzen-länge*	Ultimate tensile strength *Min. Bruchkraft*	Weight per meter *Gewicht*
	P	d_1 max	b_1 min	d_2 max	L max	Q min	q
	mm	mm	mm	mm	mm	KN/LB	kg/m
12AH–TB35	19.05	11.91	12.57	5.94	29.2	31.8/7227	4.35

Donghua Chain No. *Donghua Ketten Nr.*	H	h_2	d_3	F	W	G_1	h_1	d_4	T	F_1	W_1	L_1	G	d_5
	mm	mm	mm	mm	mm	mm	mm	mm	mm	mm	mm	mm	mm	mm
12AH–TB35	35.0	26.0	10.5	40.0	54.0	18.0	15.0	6.2	3.25	24.8	31.8	24.0	37.0	6.2

Förderketten
Conveyor chains
Chaînes de manutention

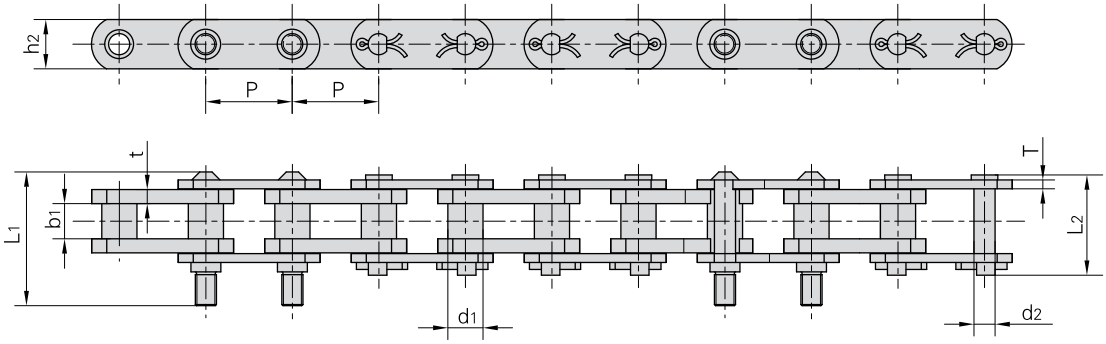

Donghua Chain No. *Donghua Ketten Nr.*	Pitch *Teilung*	Bush diameter *Buchsen-durch-messer*	Width between inner plates *Innere Breite*	Pin diameter *Bolzen-durch-messer*	Pin length *Bolzen-länge*		Plate depth *Laschen-höhe*	Plate thickness *Laschen-dicke*	Ultimate tensile strength *Min. Bruchkraft*	Average tensile strength *Durchschn. Bruchkraft*	Weight per meter *Gewicht*
	P	d_1 max	b_1 min	d_2 max	L_1 max	L_2 max	h_2 max	t/T max	Q min	Q_0 min	q
	mm	mm	mm	mm	mm	mm	mm	mm	kN/LB	kN	kg/m
78PF1	78.1	31.75	31.75	19.05	122.0	90.5	44.5	12.7/8.0	140.0/31818	166.88	14.22

Förderketten für die Papierindustrie
Conveyor chains for paper mill
Chaînes de manutention pour l'industrie papetière

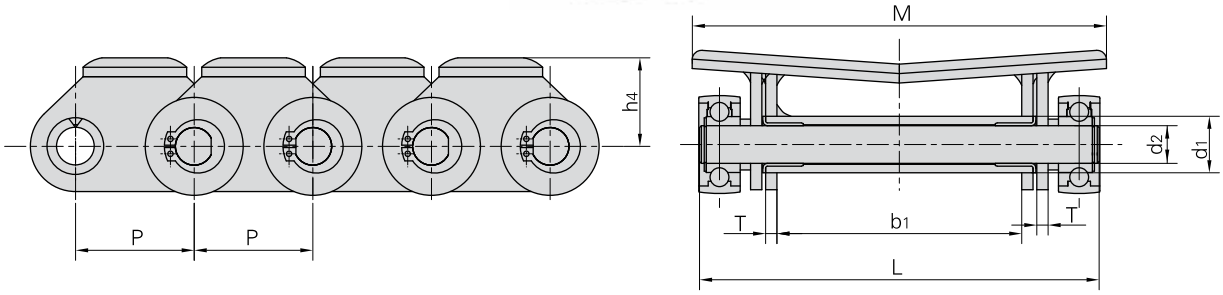

Donghua Chain No. *Donghua Ketten Nr.*	Pitch *Teilung*	Bush diameter *Buchsen-durch-messer*	Width between inner plates *Innere Breite*	Pin diameter *Bolzen-durch-messer*	Pin length *Bolzen-länge*	Plate thickness *Laschen-dicke*	Attachment dimension *Befestigungs-laschen-abmessungen*		Ultimate tensile strength *Min. Bruchkraft*	Average tensile strength *Durchschn. Bruchkraft*
	P	d_1 max	b_1 min	d_2 max	L max	T max	M	h_4	Q min	Q_0 min
	mm	mm	mm	mm	mm	mm	mm	mm	kN/LB	kN
63PF2	63.0	30.0	130.0	20.0	213.2	6.0	220.0	50.0	160.0/36364	176.0

Förderketten für die Papierindustrie
Conveyor chains for paper mill
Chaînes de manutention pour l'industrie papetière

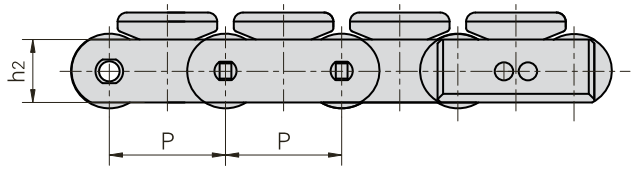

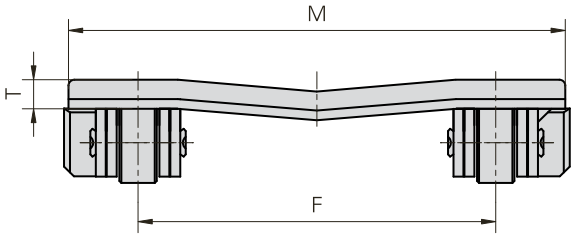

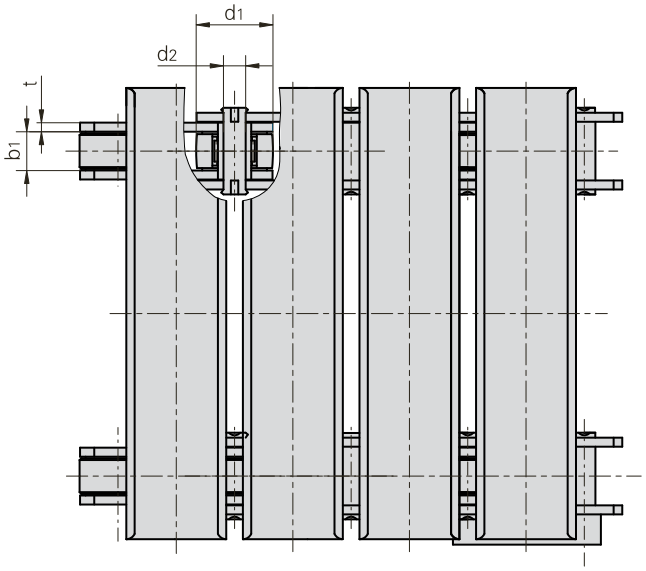

Donghua Chain No. *Donghua Ketten Nr.*	Pitch *Teilung*	Width between inner plates *Innere Breite*	Pin diameter *Bolzen-durch-messer*	Roller diameter *Rollen-durch-messer*	Plate depth *Laschen-höhe*	Plate thickness *Laschen-dicke*	Attachment dimension *Befestigungs-laschen-abmessungen*			Ultimate tensile strength *Min. Bruchkraft*
	P	b_1 min	d_2 max	d_1 max	h_2 max	t max	F	T	M	Q min
	mm	mm	mm	mm	mm	mm	mm	mm	mm	kN
P63F16	63.0	21.5	12.0	42.0	35.0	5.0	180.0	15.0	250.0	120.0

Förderketten für die Papierindustrie
Conveyor chains for paper mill
Chaînes de manutention pour l'industrie papetière

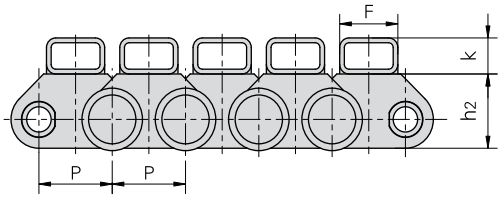

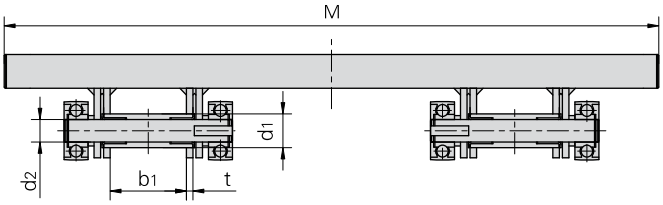

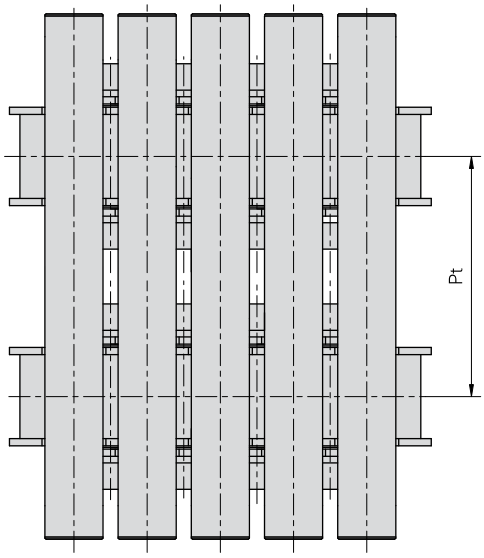

Donghua Chain No. *Donghua Ketten Nr.*	Pitch *Teilung*	Width between inner plates *Innere Breite*	Pin diameter *Bolzen-durch-messer*	Bush diameter *Buchsen-durch-messer*	Plate depth *Laschen-höhe*	Plate thickness *Laschen-dicke*	Attachment dimension *Befestigungs-laschen-abmessungen*				Ultimate tensile strength *Min. Bruchkraft*
	P	b_1 min	d_2 max	d_1 max	h_2 max	t max	F	K	Pt	M	Q min
	mm	mm	mm	mm	mm	mm	mm	mm	mm	mm	kN
P63F23	63.0	70.0	20.0	52.0	61.8	6.0	50.0	30.0	688.0	1200.0	160.0

Rollenketten für Lackier- und Trocknungsanlagen
Conveyor chains for metal decorating system
Chaînes à rouleaux pour systèmes de peinture et de séchage

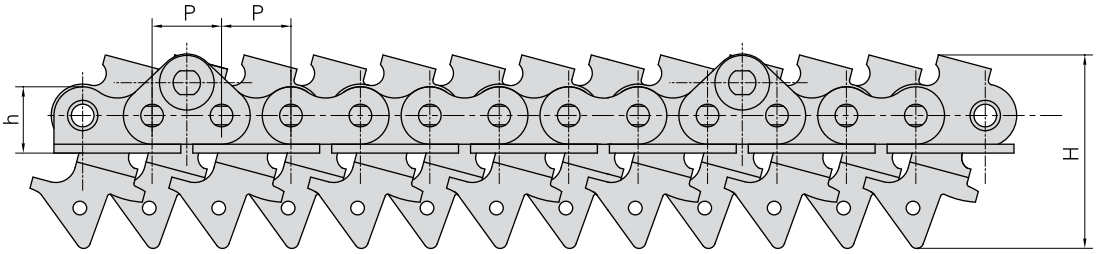

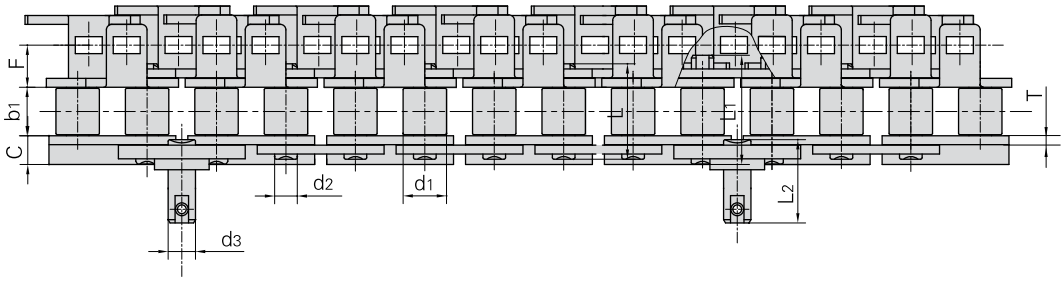

Donghua Chain No. *Donghua Ketten Nr.*	Pitch *Teilung*	Roller diameter *Rollen-durch-messer*	Width between inner plates *Innere Breite*	Pin diameter *Bolzen-durch-messer*		Pin length *Bolzen-länge*			Plate dimension *Laschen-abmessungen*		Assembly dimension *Abmessungen Anbauteile*			Ultimate tensile strength *Min. Bruchkraft*
	P	d_1 max	b_1 min	d_2 max	d_3 max	L max	L_1 max	L_2 max	h	T	H	F	C	Q min
	mm	mm	mm	mm	mm	mm	mm	mm	mm	mm	mm	mm	mm	kN/LB
16BF10	25.4	15.88	19.0	8.28	10.0	36.1	41.0	43.1	23.9	3.1	70.5	15.5	10.15	40.0/9090
16BF27	25.4	15.88	19.0	8.28	10.0	36.1	41.0	43.1	23.9	3.1	85.0	17.0	10.15	40.0/9090

Rollenketten für Lackier- und Trocknungsanlagen
Conveyor chains for metal decorating system
Chaînes à rouleaux pour systèmes de peinture et de séchage

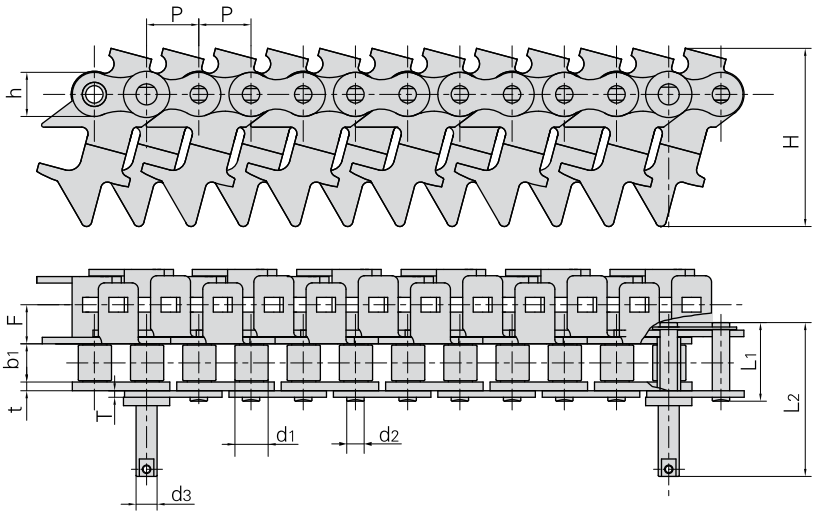

Donghua Chain No. *Donghua Ketten Nr.*	Pitch *Teilung*	Roller diameter *Rollen-durch-messer*	Width between inner plates *Innere Breite*	Pin diameter *Bolzen-durch-messer*		Pin length *Bolzen-länge*		Plate dimension *Laschen-abmessungen*			Assembly dimension *Abmessungen Anbauteile*		Ultimate tensile strength *Min. Bruchkraft*
	P	d_1 max	b_1 min	d_2 max	d_3 max	L_1 max	L_2 max	h	T	t	H	F	Q min
	mm	mm	mm	mm	mm	mm	mm	mm	mm	mm	mm	mm	kN/LB
16BF12	25.4	15.88	18.0	8.28	10.0	37.4	73.2	21.0	3.1	4.15	85.0	18.5	40.0/9090

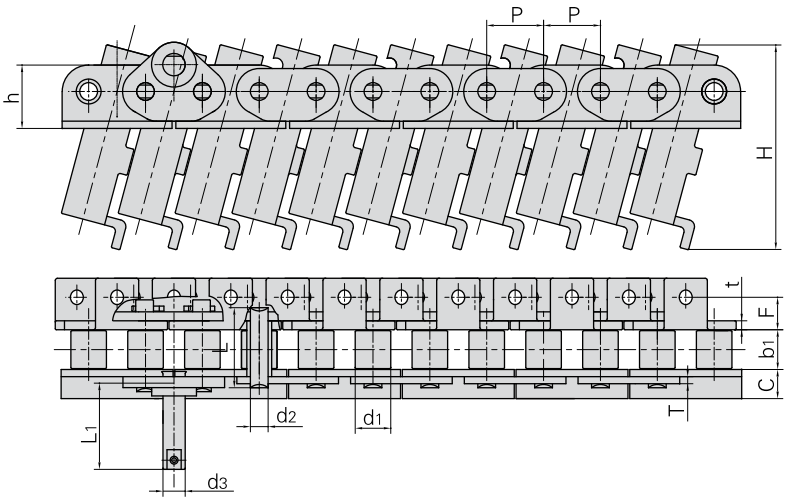

Donghua Chain No. *Donghua Ketten Nr.*	Pitch *Teilung*	Roller diameter *Rollen-durch-messer*	Width between inner plates *Innere Breite*	Pin diameter *Bolzen-durch-messer*		Pin length *Bolzen-länge*		Plate dimension *Laschen-abmessungen*			Assembly dimension *Abmessungen Anbauteile*			Ultimate tensile strength *Min. Bruchkraft*
	P	d_1 max	b_1 min	d_2 max	d_3 max	L	L_1	h	T	t	H	F	C	Q min
	mm	mm	mm	mm	mm	mm	mm	mm	mm	mm	mm	mm	mm	kN/LB
16AF18	25.4	15.88	17.00	7.92	10.0	36.2	48.6	28.3	3.25	4.0	92.0	14.7	13.0	40.0/9090

Rollenketten für Lackier- und Trocknungsanlagen
Conveyor chains for metal decorating system
Chaînes à rouleaux pour systèmes de peinture et de séchage

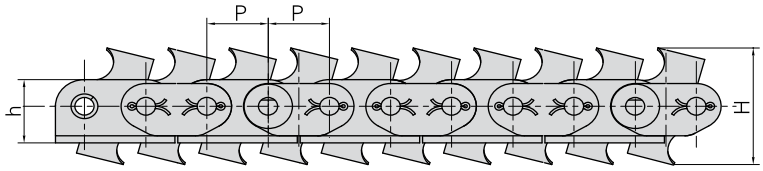

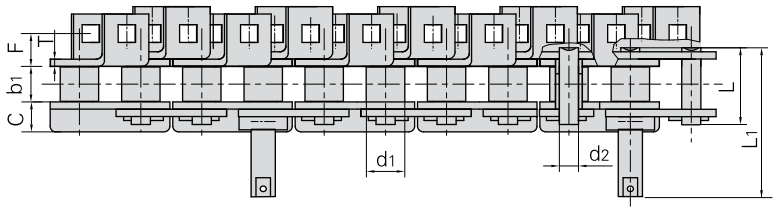

Donghua Chain No. *Donghua Ketten Nr.*	Pitch *Teilung* P	Roller diameter *Rollen-durch-messer* d_1 max	Width between inner plates *Innere Breite* b_1 min	Pin diameter *Bolzen-durch-messer* d_2 max	Pin length *Bolzen-länge* L	L_1	Plate dimension *Laschen-abmessungen* h	T	Assembly dimension *Abmessungen Anbauteile* H	F	C	Ultimate tensile strength *Min. Bruchkraft* Q min
	mm	mm	mm	mm	mm	mm	mm	mm	mm	mm	mm	kN/LB
16AF7	25.4	15.88	15.75	7.92	36.5	67.9	28.3	3.25	59.1	13.5	13	40.0/9090

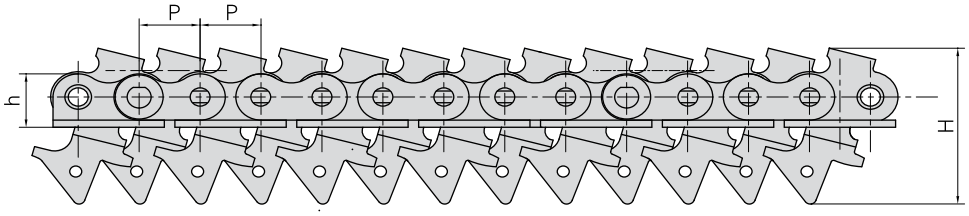

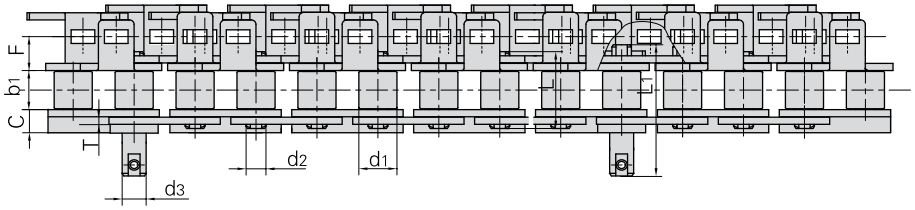

Donghua Chain No. *Donghua Ketten Nr.*	*Teilung* Pitch P	*Rollen-durch-messer* Roller diameter d_1 max	*Innere Breite* Width between inner plates b_1 min	*Bolzen-durch-messer* Pin diameter d_2 max	d_3 max	*Bolzen-länge* Pin length L	L_1	*Laschen-abmessungen* Plate dimension h	T	*Abmessungen Anbauteile* Assembly dimension H	F	C	*Min. Bruchkraft* Ultimate tensile strength Q min
	mm	mm	mm	mm	mm	mm	mm	mm	mm	mm	mm	mm	kN
16AF27	25.4	15.88	15.75	7.92	10.0	32.7	75.2	28.3	3.25	71.0	14.6	13.0	40.0

Plattenbandketten
To top chain-curved movement
Chaînes à palettes

A type
A-Typ

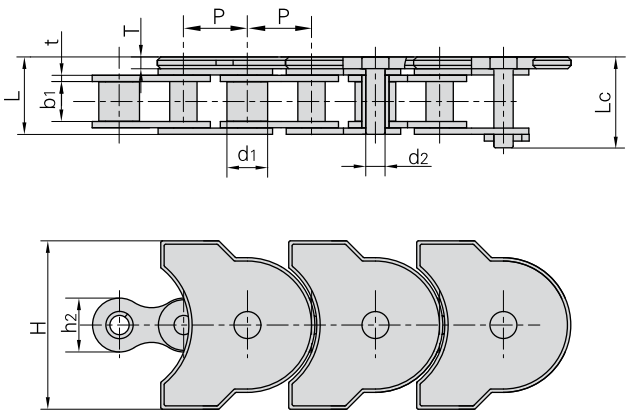

B type
B-Typ

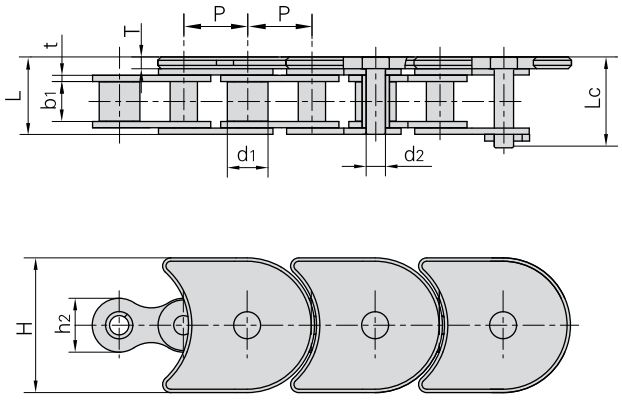

Donghua Chain No. *Donghua Ketten Nr.*	Pitch *Teilung*	Roller diameter *Rollen-durch-messer*	Width between inner plates *Innere Breite*	Pin diameter *Bolzen-durch-messer*	Pin length *Bolzen-länge*		Plate dimension *Laschen-abmessungen*		Attachment dimension *Befestigungs-laschen-abmessungen*		Ultimate tensile strength *Min. Bruchkraft*	Weight per meter *Gewicht*	Type *Typ*
	P	d_1 max	b_1 min	d_2 max	L max	Lc max	h_2 max	t	H	T	Q min	q	
	mm	mm	mm	mm	mm	mm	mm	mm	mm	mm	kN/LB	kg/m	
TOS50	19.05	12.07	11.68	5.72	23.3	27.28	16.0	1.85	50	3.50	29.0/6591	2.35	A
TOS50F1	25.40	12.07	11.68	5.72	22.8	27.28	21.0	1.85	50	3.50	29.0/6591	2.95	B
TOS80	38.10	15.88	15.75	7.92	32.4	–	27.3	3.25	82.6	3.25	55.6/12636	4.91	B

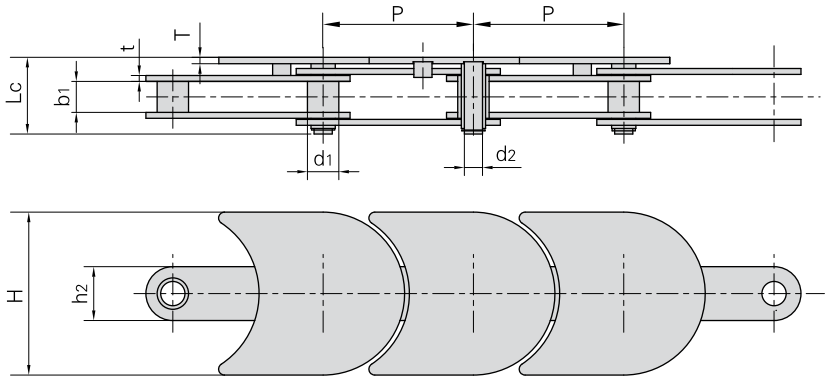

Donghua Chain No. *Donghua Ketten Nr.*	Pitch *Teilung*	Bush diameter *Buchsen-durch-messer*	Width between inner plates *Innere Breite*	Pin diameter *Bolzen-durch-messer*	Pin length *Bolzen-länge*	Plate dimension *Laschen-abmessungen*		Attachment dimension *Befestigungs-laschen-abmessungen*		Ultimate tensile strength *Min. Bruchkraft*	Weight per meter *Gewicht*
	P	d_1 max	b_1 min	d_2 max	Lc max	h_2 max	t	H	T	Q min	q
	mm	mm	mm	mm	mm	mm	mm	mm	mm	kN/LB	kg/m
76HP	76.2	15.92	15.7	9.2	37.5	27.3	3.0	82.6	3.0	45.0/10227	2.76

Plattenbandketten
To top chain-curved movement
Chaînes à palettes

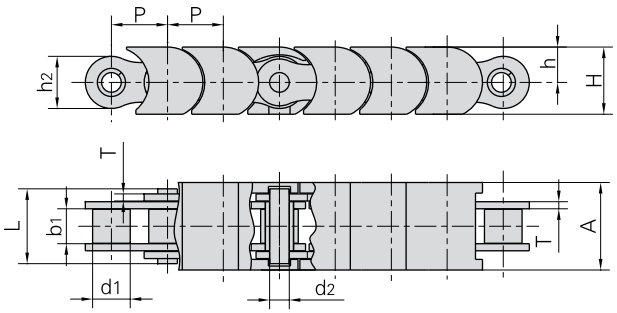

Donghua Chain No. *Donghua Ketten Nr.*	Pitch *Teilung*	Roller diameter *Rollen-durch-messer*	Width between inner plates *Innere Breite*	Pin diameter *Bolzen-durch-messer*	Pin length *Bolzen-länge*	Plate dimension *Laschen-abmessungen*		Plastic attachment dimension *Plastik-befestigungs-laschen-abmessungen*			Ultimate tensile strength *Min. Bruchkraft*
	P	d_1 max	b_1 min	d_2 max	L max	h_2 max	T max	A	h	H	Q min
	mm	mm	mm	mm	mm	mm	mm	mm	mm	mm	kN/LB
08B–TP	12.700	8.51	7.75	4.45	16.7	11.8	1.60	19.8	8.0	15.2	18/4091
10B–TP	15.875	10.16	9.65	5.08	19.5	14.7	1.70	24.8	9.5	17.5	22.4/5091
12B–TP	19.050	12.07	11.68	5.72	22.5	16.0	1.85	29.8	11.0	19.8	29/6591

Double flex Ketten
Double flex chains
Chaînes double flex

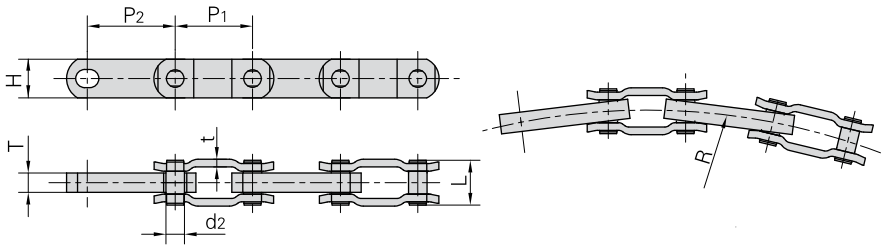

Donghua Chain No. *Donghua Ketten Nr.*	Pitch *Teilung*	Pitch *Teilung*	Thickness of inner plates *Innen-laschen-dicke*	Pin diameter *Bolzen-durch-messer*	Pin length *Bolzen-länge*	Plate dimension *Laschen-abmessungen*		Side bow radius *Seiten-bogen-radius*	Ultimate tensile strength *Min. Bruchkraft*	Average tensile strength *Durchschn. Bruchkraft*	Weight per meter *Gewicht*
	P_1	P_2	T	d_2 max	L max	H max	t	R min	Q min	Q_0	q
	mm	mm	mm	mm	mm	mm	mm	mm	kN/LB	kN	kg/m
3500	63.5	76.2	15.9	14.27	37.0	32.0	6.3	508.0	160.0/36363	196.0	5.14

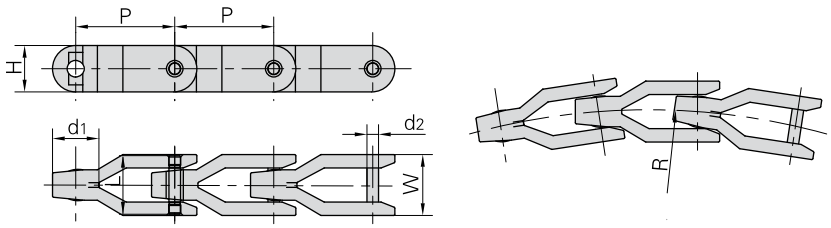

Donghua Chain No. *Donghua Ketten Nr.*	Pitch *Teilung*	Pin diameter *Bolzen-durchmesser*	Pin length *Bolzen-länge*	Plate dimension *Laschen-abmessungen*			Side bow radius *Seitenbogen-radius*	Ultimate tensile strength *Min. Bruchkraft*	Weight per meter *Gewicht*
	P	d_2 max	L	H max	W max	d_1	R min	Q min	q
	mm	mm	mm	mm	mm	mm	mm	kN/LB	kg/m
CC1400	81.3	9.5	48.0	38.5	50.0	38.0	500	30.0/6818	1.99

KÖBO-DONGHUA

The Chain People

Ketten mit Hohlbolzen
Hollow pin chains
Chaînes avec axes creux

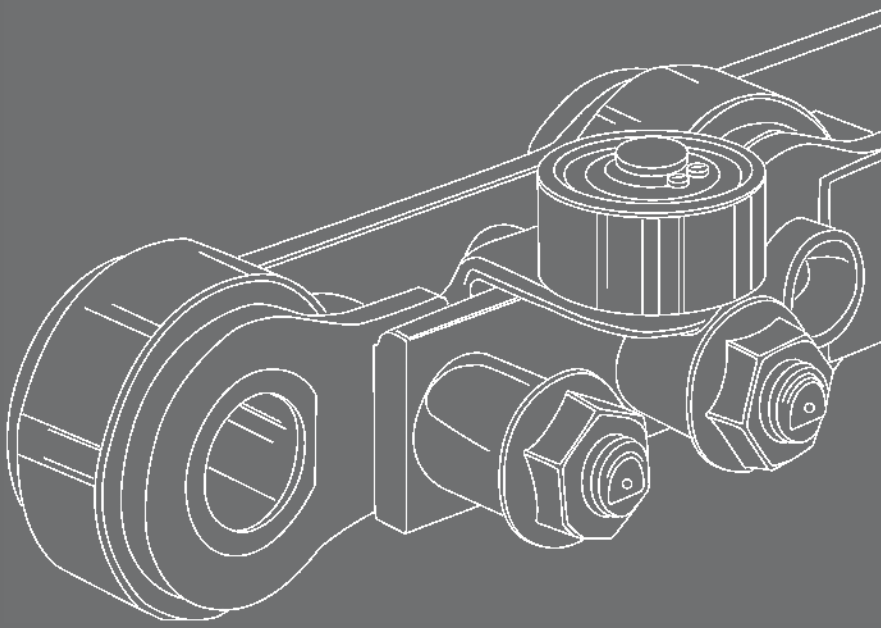

Zertifiziert nach DIN EN ISO 9001

Ketten mit Hohlbolzen
Hollow pin chains
Chaînes avec axes creux

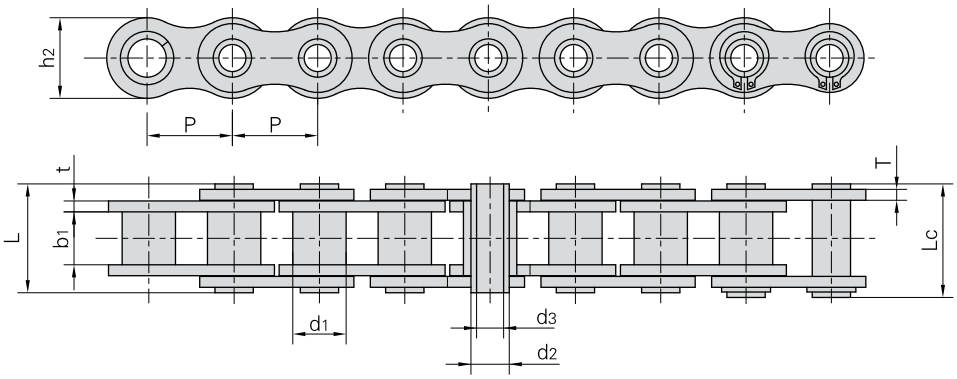

Donghua Chain No. *Donghua Ketten Nr.*	Pitch *Teilung*	Bush diameter *Buchsen-durch-messer*	Width between inner plates *Innere Breite*	Pin diameter *Bolzen-durch-messer*		Pin length *Bolzen-länge*		Inner plate depth *Innen-laschen-höhe*	Plate thickness *Laschen-dicke*	Ultimate tensile strength *Min. Bruchkraft*	Average tensile strength *Durchschn. Bruchkraft*	Weight per meter *Gewicht*
	P	d_1 max	b_1 min	d_2 max	d_3 min	L max	Lc max	h_2 max	t/T max	Q min	Q_0	q
	mm	mm	mm	mm	mm	mm	mm	mm	mm	kN/LB	kN	kg/m
08BHPF	12.700	8.51	7.75	6.55	4.50	16.4	17.6	11.80	1.6/1.3	11.1/2523	12.1	0.56
08BHPF5	12.700	8.51	7.75	6.30	4.50	16.8	18.0	12.00	1.60	9.6/2182	10.6	0.62
10BHPF3	15.875	10.16	9.65	7.02	5.13	19.5	20.5	14.70	1.70	10.0/2272	11.5	0.86
10BHPF4	15.875	10.16	9.50	7.20	5.00	19.8	21.3	14.00	2.03/1.6	12.5/2840	14.0	0.82
12BHPF2	19.050	12.07	11.68	8.09	6.00	22.7	23.9	16.10	1.85	14.0/3180	16.0	0.82
12BHPF3	19.050	12.07	11.70	8.22	5.75	23.6	24.9	16.20	2.42/1.85	16.0/3636	18.0	1.14
16BHPF3	25.400	15.88	17.02	11.50	8.20	35.3	37.0	23.20	4.0/3.1	49.0/11136	52.2	2.26
16BHPF4	25.400	11.70	13.50	8.00	4.30	28.9	30.2	21.30	3.00	30.0/6818	33.0	1.81
40HP	12.700	7.95	7.85	5.63	4.00	16.5	17.6	12.00	1.50	11.0/2500	12.2	0.54
08BHPF7	12.700	8.51	9.20	6.55	4.10	17.8	19.0	11.80	1.60	11.1/2523	12.1	0.64
08BHP	12.700	8.51	7.75	6.55	4.50	16.4	17.6	11.80	1.30	11.1/2523	12.1	0.52
50HP	15.875	10.16	9.40	7.03	5.13	20.7	21.9	15.09	2.03	20.0/4545	22.6	0.91
50HPF4	15.875	10.16	8.80	7.03	5.13	19.9	21.1	15.09	2.03	18.0/4180	19.2	0.89
50HP–HP	15.875	10.16	9.40	7.03	5.13	22.6	23.7	15.09	2.42	20.0/4545	22.6	1.02
60HP	19.050	11.91	12.70	8.31	6.00	25.8	26.8	18.00	2.42	24.0/5455	26.9	1.29
60HPF1	19.050	11.91	12.70	8.31	5.01	25.5	26.8	18.00	2.42	28.0/6364	30.9	1.37
80HP	25.400	15.88	15.75	11.40	8.05	32.5	33.8	24.00	3.25	50.0/11364	52.0	2.26
80HPF1	25.400	11.70	13.50	7.80	4.00	27.0	28.4	21.50	2.42	27.44/6236	29.3	1.50
80HPF2	25.400	15.88	15.75	11.40	8.40	32.5	33.8	24.00	3.25	45.0/10227	48.0	2.23
80H–HP	25.400	15.88	15.75	11.40	8.05	35.7	37.0	24.00	4.00	50.0/11364	52.0	2.63
80HPF3	25.400	15.88	15.88	11.40	7.96	32.4	33.8	23.24	3.25	50.0/11364	52.0	2.26
80HPF4	25.400	11.70	13.50	7.80	4.10	29.0	30.5	21.50	3.00	40.0/9091	43.2	1.77
HB41.75F5	41.750	17.11	19.90	14.11	10.30	39.0	40.4	25.26	4.00	49.0/11136	53.9	2.11
A2080HP	50.800	15.88	15.75	11.40	8.05	32.4	33.8	24.00	3.25	42.3/9615	46.1	1.60

Ketten mit Hohlbolzen
Hollow pin chains
Chaînes avec axes creux

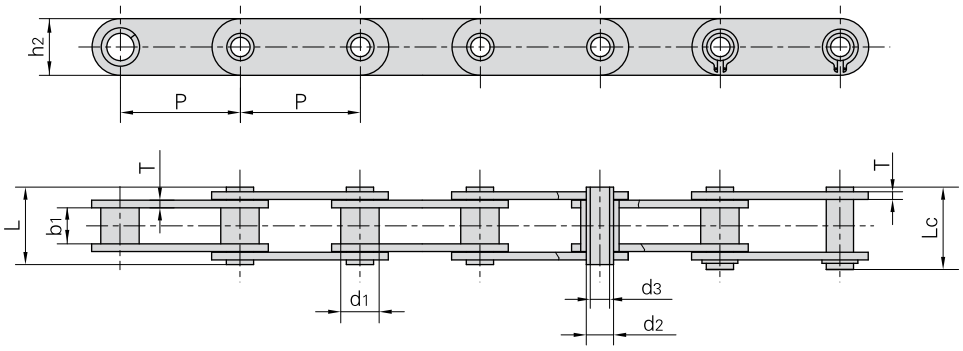

Donghua Chain No. *Donghua Ketten Nr.*	Pitch *Teilung*	Bush diameter *Buchsen-durch-messer*	Width between inner plates *Innere Breite*	Pin diameter *Bolzen-durch-messer*		Pin length *Bolzen-länge*		Inner plate depth *Innen-laschen-höhe*	Plate thickness *Laschen-dicke*	Ultimate tensile strength *Min. Bruchkraft*	Average tensile strength *Durchschn. Bruchkraft*	Weight per meter *Gewicht*
	P	d_1 max	b_1 min	d_2 max	d_3 min	L max	Lc max	h_2 max	T max	Q min	Q_0	q
	mm	mm	mm	mm	mm	mm	mm	mm	mm	kN/LB	kN	kg/m
C2040HP	25.400	7.95	7.85	5.63	4.00	16.5	17.6	12.00	1.50	11.0/2500	12.6	0.46
C2040HPF1	25.400	7.95	7.85	5.63	M4	16.5	17.6	12.00	1.50	9.0/2045	9.9	0.44
C2050HP	31.750	10.16	9.40	7.22	5.12	20.5	21.8	15.00	2.03	20.4/4636	22.8	0.76
C2060HP	38.100	11.91	12.70	8.31	6.00	25.8	26.8	17.00	2.42	24.0/5455	27.1	1.02
HP40F1	40.000	18.00	22.00	12.00	8.00	47.5	48.2	35.00	5.00	57.0/13049	63.8	5.38
HP40F2	40.000	18.00	22.00	12.00	8.20	47.5	48.2	35.00	5.00	57.0/13049	63.0	5.37
C2080HP	50.800	15.88	15.75	11.40	8.05	32.5	33.8	24.00	3.25	50.0/11364	52.0	1.81
HP50F1	50.000	26.00	14.50	20.00	14.70	35.3	36.2	40.00	3.10	30.0/6818	33.6	3.98
C40HP	12.700	7.95	7.85	5.63	4.00	16.5	17.6	12.00	1.50	11.0/2500	12.2	0.64
C50HP	15.875	10.16	9.40	7.03	5.13	20.7	21.9	15.09	2.03	20.0/4545	22.6	1.05
C60HP	19.050	11.91	12.70	8.31	6.00	25.8	26.8	18.00	2.42	24.0/5455	26.9	1.52
C80HP	25.400	15.88	15.75	11.40	8.05	32.5	33.8	24.00	3.25	50.0/11364	52.0	2.63
C08BHP	12.700	8.51	7.75	6.55	4.50	16.4	17.6	11.80	1.6/1.3	11.0/2500	11.5	0.62
HP12.5	12.500	8.51	8.20	6.65	4.50	16.4	17.6	11.60	1.5/1.3	8.0/1819	8.8	0.61
HP50F7	50.000	18.00	15.00	14.00	10.20	36.0	37.5	26.00	4.00	40/9091	43.2	2.56
HP50F10	50.000	18.00	22.00	12.10	8.30	39.5	40.6	30.00	3.00	45/10227	48.0	2.73
HB55	55.000	18.00	22.00	14.00	10.00	43.4	44.5	30.00	4.00	50/11364	52.0	3.31
HB55F1	55.000	24.00	24.00	17.00	12.00	52.0	53.5	40.00	5.00	90/20455	100.0	6.34
HB38.1F8	38.100	10.16	9.65	7.10	5.40	20.4		16.00	2.03	13/2954	14.3	0.67
C2060H–HP	38.100	11.91	12.70	8.31	6.00	29.2	30.2	17.0	3.25	24/5455	27.1	1.29

Ketten mit Hohlbolzen
Hollow pin chains
Chaînes avec axes creux

Type A
A-Typ

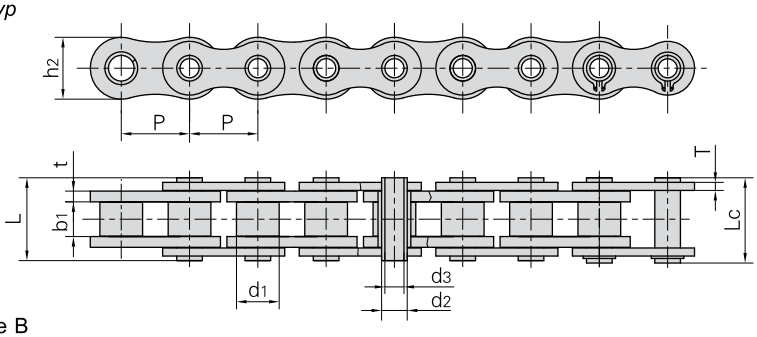

Type B
B-Typ

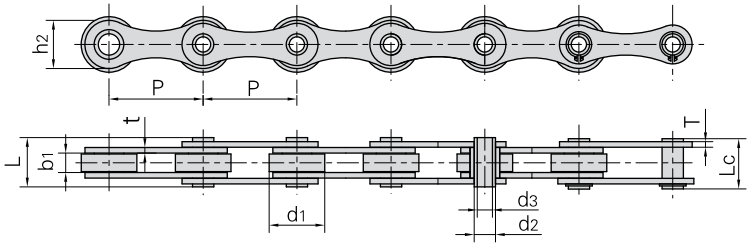

Donghua Chain No. *Donghua Ketten Nr.*	Pitch *Teilung*	Roller diameter *Rollen-durch-messer*	Width between inner plates *Innere Breite*	Pin diameter *Bolzen-durch-messer*		Pin length *Bolzen-länge*		Inner plate depth *Innen-laschen-höhe*	Plate thickness *Laschen-dicke*	Ultimate tensile strength *Min. Bruchkraft*	Average tensile strength *Durchschn. Bruchkraft*	Weight per meter *Gewicht*	Type *Typ*
	P	d_1 max	b_1 min	d_2 max	d_3 min	L max	Lc max	h_2 max	t/T max	Q min	Q_0	q	
	mm	mm	mm	mm	mm	mm	mm	mm	mm	kN/LB	kN	kg/m	
10BHB	15.875	10.16	9.65	5.94	4.04	19.30	20.60	14.70	1.70	17.00/3864	20.80	0.86	A
12BHP	19.050	12.07	11.68	6.50	4.00	21.60	22.80	15.90	1.85	23.60/5364	25.90	1.09	A
60HB	19.050	11.91	12.70	7.00	5.01	25.50	26.60	18.00	2.42	20.00/4545	22.40	1.35	A
16BHBF1	25.400	15.88	12.70	9.53	7.05	30.80	32.20	23.00	4.15/3.1	40.00/9091	45.00	2.28	A
HB25.4	25.400	20.00	8.00	8.00	5.20	19.50	20.50	17.00	2.03	25.00/5680	28.00	1.30	A
HP35	35.000	20.00	16.00	13.35	10.20	30.40	31.60	26.30	2.50	23.52/5345	26.40	2.02	A
HB35	35.000	20.00	16.00	14.00	10.2	32.00	33.50	38.10	3.00	40.00/9091	45.00	2.39	A
HB38.1	38.100	20.00	8.00	8.00	5.30	19.60	20.70	17.30	2.03	28.00/5682	28.80	0.98	B
HB38.1F1	38.100	20.00	18.00	10.50	5.10	39.00	40.30	22.00	4.00	60.00/13636	64.30	2.59	B
HB38.1F3	38.100	25.40	12.70	12.00	8.30	27.00	28.60	21.00	2.50	25.00/5682	28.80	1.51	B
HB38.1F4	38.100	20.00	12.70	8.00	5.20	26.00	27.20	17.00	2.42	24.00/5455	26.90	1.48	B
HP40F4	40.000	26.00	10.00	11.40	8.20	26.50	28.00	24.00	3.00	50.00/11364	56.70	2.20	B
HP41.75F1	41.750	17.10	20.20	11.11	8.20	35.70	39.00	21.65	3.10	26.50/6022	29.20	1.60	A
HP41.75F2	41.750	17.10	20.20	11.11	8.20	35.70	41.00	25.26	3.10	49.00/11136	54.80	2.04	A
HP41.75F3	41.750	17.00	20.50	11.00	8.30	36.00	39.50	21.40	3.00	27.00/6136	28.00	1.62	A
HP50F2	50.000	31.00	15.00	13.20	10.20	36.50	38.00	25.00	4.00	40.00/9091	43.20	3.40	B
HB50.8	50.800	30.00	10.50	11.40	8.20	27.40	28.60	26.00	3.10	50.00/11364	53.60	2.56	B

Ketten mit Hohlbolzen
Hollow pin chains
Chaînes avec axes creux

Type A
A-Typ

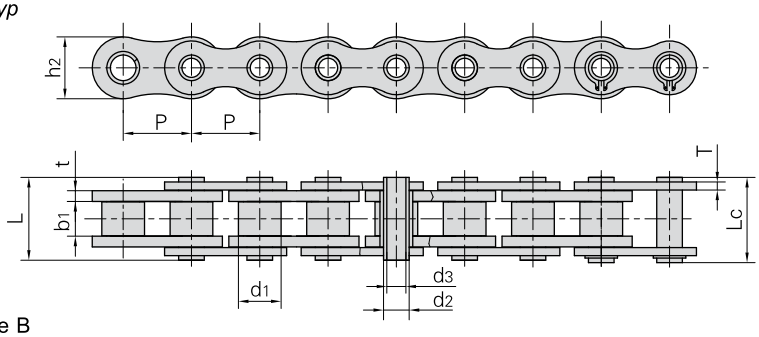

Type B
B-Typ

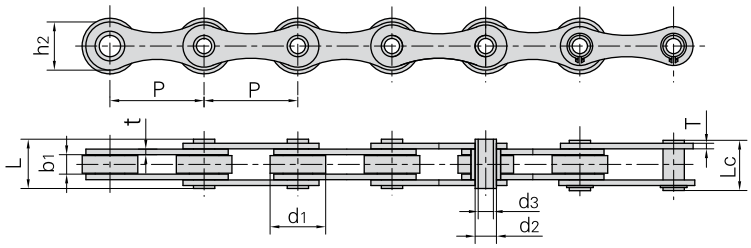

Donghua Chain No. *Donghua Ketten Nr.*	Pitch *Teilung*	Roller diameter *Rollen-durch-messer*	Width between inner plates *Innere Breite*	Pin diameter *Bolzen-durch-messer*		Pin length *Bolzen-länge*		Inner plate depth *Innen-laschen-höhe*	Plate thickness *Laschen-dicke*	Ultimate tensile strength *Min. Bruchkraft*	Average tensile strength *Durchschn. Bruchkraft*	Weight per meter *Gewicht*	Type *Typ*
	P	d_1 max	b_1 min	d_2 max	d_3 min	L max	Lc max	h_2 max	t/T max	Q min	Q_0	q	
	mm	mm	mm	mm	mm	mm	mm	mm	mm	kN/LB	kN	kg/m	B
HB50.8F4	50.80	30.00	10.50	13.6	8.20	27.40	28.90	26.0	3.10	42.00/9545	48.20	2.28	B
HB63	63.00	30.00	10.00	11.4	8.10	26.70	28.10	26.5	3.10	50.00/11364	53.60	2.07	B
HB63F1	63.00	40.00	10.00	11.4	8.10	26.70	28.10	26.5	3.10	50.00/11364	53.60	2.27	B
HB63F2	63.00	40.00	20.00	11.4	8.10	36.70	38.10	26.5	3.10	50.00/11364	53.60	3.20	B
HB63F3	63.00	40.00	15.00	11.4	8.20	35.60	37.00	26.5	4.00	35.00/7955	38.50	3.90	B
HB63F4	63.00	30.00	20.00	11.4	8.10	36.70	38.10	26.5	3.10	50.00/11364	53.60	2.97	B
HB63F6	63.00	30.00	10.00	11.7	8.20	26.70	28.10	26.5	3.10	50.00/11364	56.70	2.08	B
HB63F7	63.00	40.00	18.00	14.0	10.20	38.00	39.50	28.0	4.00	50.00/11364	56.70	4.26	B
HB63F8	63.00	30.00	20.00	11.7	8.10	36.50	38.00	26.5	3.10	50.00/11364	56.70	2.91	B
HB100	100.00	30.00	10.50	11.4	8.20	27.40	28.60	26.0	3.10	50.00/11364	53.60	1.56	A
12AHBF2	19.05	11.91	12.70	7.0	5.10	26.50	27.60	18.0	2.42	20/4545	22.40	1.39	A
12BHPF6SLR	19.05	12.07	11.68	6.5	4.04	22.30	23.50	15.9	1.85	23.6/5364	25.96	1.12	B
HP38.1F9	38.10	22.20	12.70	11.0	8.15	26.50	27.50	18.0	2.50	22/5000	24.40	1.46	B
DH16500HP	50.00	30.00	10.50	11.4	8.20	27.40	28.60	26.0	3.10	50.00/11364	53.60	2.23	B
HB50F4	50.00	30.00	10.00	16.0	8.00	26.60	30.00	25.4	3.00	60/13635	67.20	2.03	B
HB50.8F14	50.80	30.00	10.00	16.0	8.00	26.60	30.00	25.4	3.00	60/13635	67.20	2.01	B
HB100F8	100.00	30.00	10.00	16.0	8.00	26.60	30.00	25.4	3.00	60/13635	67.20	1.37	

Ketten mit Hohlbolzen
Hollow pin chains
Chaînes avec axes creux

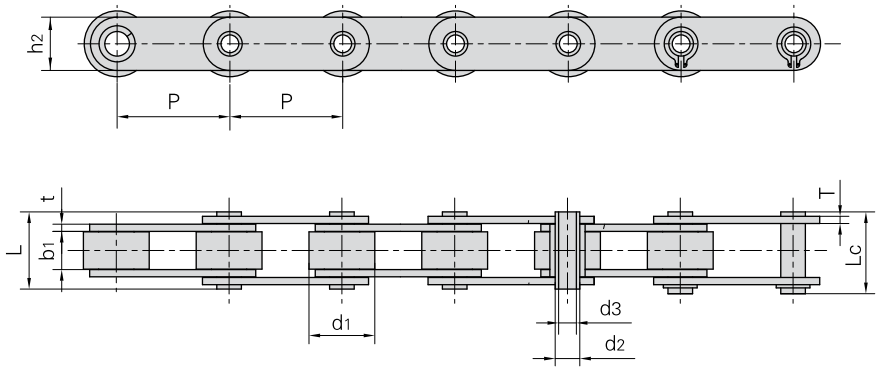

Donghua Chain No. *Donghua Ketten Nr.*	Pitch *Teilung*	Roller diameter *Rollen-durch-messer*	Width between inner plates *Innere Breite*	Pin diameter *Bolzen-durch-messer*		Pin length *Bolzen-länge*		Inner plate depth *Innen-laschen-höhe*	Plate thickness *Laschen-dicke*	Ultimate tensile strength *Min. Bruchkraft*	Average tensile strength *Durchschn. Bruchkraft*	Weight per meter *Gewicht*
	P	d_1 max	b_1 min	d_2 max	d_3 min	L max	Lc max	h_2 max	t/T max	Q min	Q_0	q
	mm	mm	mm	mm	mm	mm	mm	mm	mm	kN/LB	kN	kg/m
C2042HP	25.40	15.88	7.85	5.63	4.00	16.5	17.6	12.00	1.50	11.0/2500	12.6	0.78
C2052HP	31.75	19.05	9.53	7.22	5.12	20.5	21.8	15.00	2.03	20.4/4636	22.8	1.25
C2062HP	38.10	22.23	12.70	8.31	6.00	25.8	26.8	17.00	2.42	24.0/5455	27.1	1.72
C2082HP	50.80	28.58	15.75	11.40	8.05	32.4	33.8	24.00	3.25	50.0/11364	52.0	2.82
C2042H–HP	25.40	15.88	7.85	5.63	4.00	18.8	19.9	12.00	2.03	11.0/2500	13.2	0.95
C2052HPF1	31.75	19.05	9.40	7.03	5.12	20.0	21.5	15.30	1.85	15.0/3409	17.3	1.21
C2052HPF3	31.75	19.05	9.53	7.02	5.13	20.1	21.6	15.09	2.03	19.6/4455	21.6	1.20
C2052H–HP	31.75	19.05	9.53	7.22	5.12	22.1	23.4	15.00	2.42	20.4/4545	23.5	1.44
C2062H–HP	38.10	22.23	12.70	8.31	6.00	29.2	30.2	17.00	3.25	24.0/5455	27.6	1.99
C2082H–HP	50.80	28.58	15.75	11.40	8.05	35.7	37.0	24.00	4.00	50.0/11364	56.5	3.34
HP40	40.00	22.00	8.75	9.00	6.00	23.0	24.2	18.00	2.50	27.0/4545	28.0	1.49
HB40F1	40.00	22.00	9.00	9.00	6.00	23.0	24.5	18.00	2.50	20.0/4546	22.0	1.58
HB41.4	41.40	25.40	15.00	13.80	10.50	35.5	37.0	32.00	4.00	45.0/10227	48.0	4.20
HP50	50.00	31.00	14.50	13.20	10.40	31.1	32.5	25.00	3.10	30.0/6818	34.2	3.29
HP50F4	50.00	31.00	15.00	13.20	10.20	36.5	38.0	25.00	4.00	40.0/9091	44.8	3.73
HB50	50.00	31.00	15.00	14.00	10.20	36.0	37.5	25.00	4.00	40.0/9091	43.2	3.98
HB50.8F8	50.80	32.00	20.00	19.10	12.40	44.6	46.4	40.00	5.0/4.0	100.0/22727	108.0	6.75
C1655HP	50.80	30.00	10.50	13.00	8.20	27.4	28.9	26.00	3.10	42.0/9545	48.2	2.72
HP50.8	50.80	26.00	15.88	20.00	14.30	41.0	42.2	38.10	4.80	100.0/22727	108.0	5.32
HB50.8F9	50.80	35.00	12.00	15.50	10.20	36.0	37.3	30.00	5.00	70.0/15909	77.0	4.92
63HPF1	63.00	40.00	15.00	16.00	12.10	35.0	36.2	28.50	4.00	50.0/11364	56.7	4.20
DH4202HP	50.80	31.80	15.00	14.00	10.10	36.3	39.0	26.00	3.80	42.0/9545	51.6	3.75
DH4203HP	76.20	31.80	15.00	14.00	10.10	36.3	39.0	26.00	3.80	42.0/9545	47.1	3.01

Ketten mit Hohlbolzen
Hollow pin chains
Chaînes avec axes creux

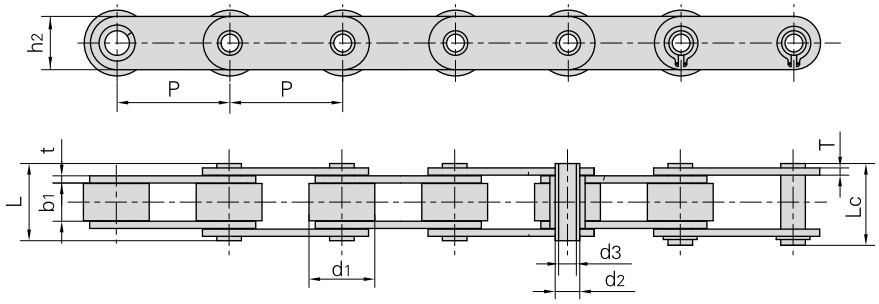

Donghua Chain No. *Donghua Ketten Nr.*	Pitch *Teilung*	Roller diameter *Rollen-durch-messer*	Width between inner plates *Innere Breite*	Pin diameter *Bolzen-durch-messer*		Pin length *Bolzen-länge*		Inner plate depth *Innen-laschen-höhe*	Plate thickness *Laschen-dicke*	Ultimate tensile strength *Min. Bruchkraft*	Average tensile strength *Durchschn. Bruchkraft*	Weight per meter *Gewicht*
	P	d_1 max	b_1 min	d_2 max	d_3 min	L max	Lc max	h_2 max	t/T max	Q min	Q_0	q
	mm	mm	mm	mm	mm	mm	mm	mm	mm	kN/LB	kN	kg/m
DH42035HP	88.9	31.80	15.00	14.00	10.1	36.3	39.0	26.0	3.8	42.0/9545	51.1	2.79
DH4204HP	101.6	31.80	15.00	14.00	10.1	36.3	39.0	26.0	3.8	42.0/9545	51.6	2.63
DH8403HP	76.2	47.60	19.00	19.05	13.6	43.8	46.3	39.0	5.1/3.8	84.3/19159	130.3	6.81
DH8404HP	101.6	47.60	19.00	19.05	13.6	43.8	46.3	39.0	5.1/3.8	84.3/19159	130.3	5.78
DH8406HP	152.4	47.60	19.00	19.05	13.6	43.8	46.3	39.0	5.1/3.8	84.0/19091	130.3	5.18
HB38.1F2	38.1	25.40	12.70	9.50	6.6	26.6	28.0	19.1	2.3	20.0/4545	22.4	2.07
HB50.8F3	50.8	30.00	16.00	14.00	9.0	36.4	37.5	25.5	3.1	42.0/9545	47.0	3.20
HB75	75.0	40.00	22.00	18.00	12.2	42.0	44.0	35.0	4.0	60.0/13636	72.0	5.57
HB76.2	76.2	31.75	15.50	12.70	9.5	35.5	37.0	26.0	4.0	42.0/9545	49.2	3.25
HB76.2F2	76.2	47.60	20.00	24.00	18.5	44.5	46.1	40.0	5.0/4.0	79.0/17953	92.5	6.77
HB80	80.0	50.00	20.00	24.00	18.5	44.5	46.1	40.0	5.0/4.0	79.0/17953	92.5	6.81
HP100	100.0	45.00	22.00	16.00	12.0	46.0	47.5	35.0	5.0	75.0/17044	90.0	6.20
HP100F1	100.0	45.00	22.00	18.00	12.0	47.2	48.5	35.0	5.0	75.0/17044	90.0	6.15

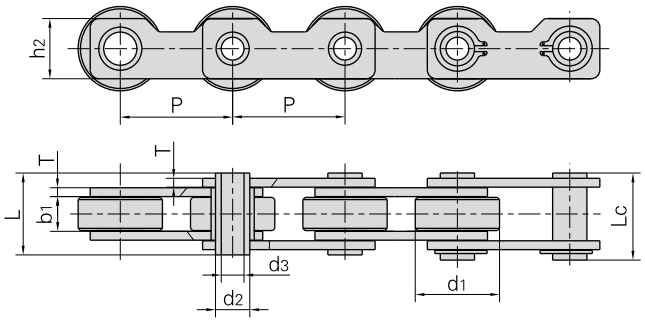

Donghua Chain No. *Donghua Ketten Nr.*	Pitch *Teilung*	Roller diameter *Rollen-durch-messer*	Width between inner plates *Innere Breite*	Pin diameter *Bolzen-durch-messer*		Pin length *Bolzen-länge*		Inner plate depth *Innen-laschen-höhe*	Plate thickness *Laschen-dicke*	Ultimate tensile strength *Min. Bruchkraft*	Average tensile strength *Durchschn. Bruchkraft*	Weight per meter *Gewicht*
	P	d_1 max	b_1 min	d_2 max	d_3 min	L max	Lc max	h_2 max	T	Q min	Q_0	q
	mm	mm	mm	mm	mm	mm	mm	mm	mm	kN/LB	kN	kg/m
HB50.8F1	50.8	38.1	15.7	15.5	10.3	35.2	36.7	27.2	4.00	55.46/51650	58.8	4.97

Ketten mit Hohlbolzen
Hollow pin chains
Chaînes avec axes creux

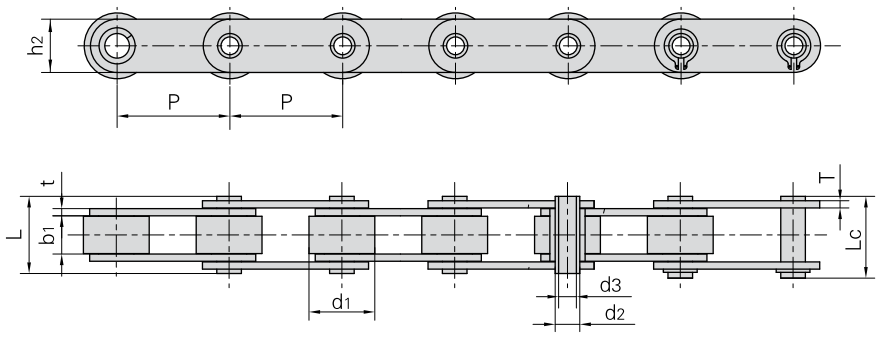

Donghua Chain No. *Donghua Ketten Nr.*	Pitch *Teilung*	Roller diameter *Rollen-durch-messer*	Width between inner plates *Innere Breite*	Pin diameter *Bolzen-durch-messer*		Pin length *Bolzen-länge*		Inner plate depth *Innen-laschen-höhe*	Plate thickness *Laschen-dicke*	Ultimate tensile strength *Min. Bruchkraft*	Average tensile strength *Durchschn. Bruchkraft*	Weight per meter *Gewicht*
	P	d_1 max	b_1 min	d_2 max	d_3 min	L max	Lc max	h_2 max	t/T max	Q min	Q_0	q
	mm	mm	mm	mm	mm	mm	mm	mm	mm	kN/LB	kN	kg/m
HP101.6F1	101.60	47.60	19.00	19.00	13.20	46.2	48.0	40.0	5.0/4.0	53.0/12045	58.20	6.09
HP101.6F2	101.60	66.70	25.40	26.90	20.10	59.2	60.7	51.0	7.1/5.1	150.0/34088	160.00	14.23
HP152	152.40	66.70	25.40	26.90	19.56	57.2	59.5	50.8	7.1/5.1	94.0/21362	107.80	9.90
HP152.4F1	152.40	47.60	19.00	19.00	13.20	46.2	48.0	40.0	5.0/4.0	54.0/12270	59.50	5.00
C2102HP	63.50	39.67	18.90	13.60	9.50	40.3	42.0	30.0	4.00	60.0/13636	72.00	5.13
C2062H–HPF3	38.10	22.23	12.70	8.31	6.00	25.8	26.8	17.0	2.42	24.0/5455	27.10	1.72
HP130	130.00	40.00	21.00	18.10	12.10	41.3	42.5	35.0	3.80	80.0/18183	89.60	4.21
HB50.8F12	50.80	28.58	16.00	14.00	9.00	36.4	37.5	25.5	3.50	42.0/9545	47.00	3.26
HB25.4F2	25.40	15.89	17.26	9.00	6.35	31.3	32.5	20.0	2.50	20.0/4545	22.40	1.97
HB50.8F11	50.80	38.10	16.00	13.80	9.70	37.2	39.5	25.4	3.90	57.0/12953	63.84	5.01
HB63F11	63.00	40.00	20.00	20.00	18.00	42.5	43.5	42.0	4.00	46.0/10454	50.60	5.83
HB65	65.00	45.00	20.00	25.00	18.00	38.0	40.0	40.0	3.00	46.0/10454	50.60	4.49
HB63.5F1	63.50	32.00	15.00	16.00	12.20	32.0	33.0	25.0	3.00	20.4/4636	22.80	2.69
HB63F12	63.00	30.00	10.00	11.40	8.10	26.7	28.1	26.5	3.10	50.0/11364	56.50	2.39
HB100F10	100.00	45.00	33.00	18.00	12.10	48.5	49.7	35.0	5.00	75.0/17046	84.70	6.05
HB100F11	100.00	40.00	20.60	16.00	12.50	42.1	43.4	35.0	4.00	75.0/17046	84.70	4.58
HB38.1F6–R	38.10	25.40	15.20	14.00	10.20	34.5	36.5	27.0	3.70	45.0/10228	49.50	3.20
HB 25.4F4	25.40	20.00	11.00	12.00	8.35	27.0	28.4	24.0	3.00	32.0/7273	35.80	2.48
HB100F9	100.00	45.00	32.80	18.00	12.40	49.0	49.0	35.0	5.00	75.0/17046	84.70	6.14
HB100F7	100.00	30.00	15.00	16.00	12.30	36.5	37.8	35.0	4.00	75.0/17046	84.70	3.49
HB100F3	100.00	30.00	24.00	15.95	10.30	46.0	47.3	35.0	4.00	75.0/17046	84.70	4.04
HB50.42	50.42	37.30	15.00	14.00	10.20	36.0	37.5	26.2	4.00	40.0/9090	44.80	4.46

Ketten mit Hohlbolzen
Hollow pin chains
Chaînes avec axes creux

Type A
A-Typ

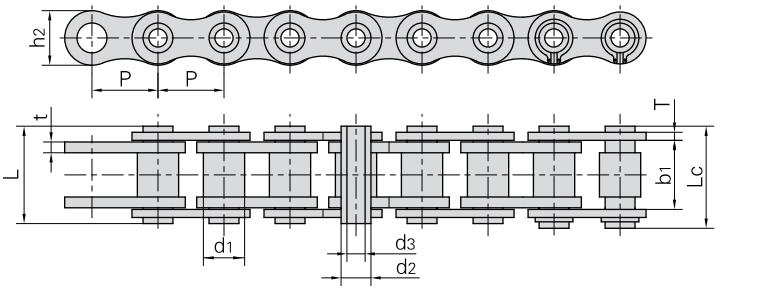

Type B
B-Typ

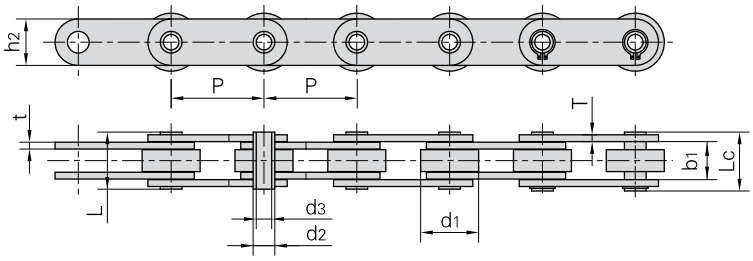

Donghua Chain No. *Donghua Ketten Nr.*	Pitch *Teilung*	Roller diameter *Rollen-durch-messer*	Width between inner plates *Innere Breite*	Pin diameter *Bolzen-durch-messer*		Pin length *Bolzen-länge*		Inner plate depth *Innen-laschen-höhe*	Plate thickness *Laschen-dicke*	Ultimate tensile strength *Min. Bruchkraft*	Average tensile strength *Durchschn. Bruchkraft*	Weight per meter *Gewicht*	Type *Typ*
	P	d_1 max	b_1 min	d_2 max	d_3 min	L max	Lc max	h_2 max	t/T max	Q min	Q_0	q	
	mm	mm	mm	mm	mm	mm	mm	mm	mm	kN/LB	kN	kg/m	
08BHPF2	12.700	8.51	13.20	6.65	5.20	18.0	19.2	11.8	1.6/1.3	10.0/2273	11.4	0.50	A
08BHPF3	12.700	8.51	13.40	6.65	4.00	19.0	20.2	11.8	1.70	14.0/3182	16.8	0.69	A
HB12.7	12.700	8.51	13.40	6.65	4.10	19.0	20.2	11.8	1.70	14.0/3182	16.8	0.69	A
08BHPF8	12.700	8.51	11.30	6.30	4.50	16.7	18.5	11.8	1.60	11.0/2500	12.1	0.80	A
40HPF1–D3	12.700	8.51	11.60	6.35	4.36	20.6	20.6	12.0	1.50	11.0/2500	12.1	0.77	A
10BHPF1	15.875	10.16	13.41	7.03	5.00	19.2	20.2	14.0	1.85	17.0/3864	20.6	0.83	A
10BHPF2	15.875	10.16	10.40	7.03	5.00	17.0	18.0	14.0	1.85	15.0/3409	17.3	0.74	A
12BHPF1	19.050	12.07	16.00	8.03	5.40	22.7	23.9	15.8	1.85	25.0/5682	28.8	1.09	A
16BHPF1	25.400	15.88	25.58	11.50	8.10	36.5	37.6	21.0	4.15/3.1	45.0/10227	52.2	2.21	A
50HPF1	15.875	10.16	13.60	7.03	5.13	20.7	21.9	14.4	2.03	18.0/4091	21.6	0.92	A
60HPF2	19.050	11.91	11.23	5.63	4.05	16.5	17.6	10.4	1.50	10.0/2273	10.8	0.62	A
C12BHPF9	19.050	12.07	15.80	8.03	5.00	22.4	23.9	16.1	1.85	25.0/5682	28.8	1.26	B
12BHPF9	19.050	12.07	15.80	8.03	5.00	22.4	23.9	16.1	1.58	25.0/5682	28.8	1.18	A
60HPF3	19.050	11.91	17.20	8.40	6.10	24.7	26.0	18.0	2.03	20.0/4546	24.0	1.54	A
63HP	63.000	40.00	23.50	16.00	12.00	35.3	38.3	28.6	4.00	65.0/14773	71.5	4.14	B
63HPF2	63.000	40.00	25.80	14.00	8.08	39.1	41.1	20.0	5.00	50.0/11364	65.7	4.17	B
63HPF4	63.000	40.00	23.50	16.00	12.30	34.7	37.7	28.6	4.00	44.0/10000	57.2	4.13	B
63HPF6	63.000	40.00	28.94	16.00	10.30	41.8	43.4	28.6	4.00	44.0/10000	57.2	5.18	B
63HPF11	63.000	40.00	23.50	16.00	12.20	34.7	37.7	28.6	4.00	65.0/147333	71.5	4.25	B
63HPF12	63.000	40.00	23.50	16.00	12.20	34.7	37.7	28.0	4.00	44.0/10000	57.2	4.02	B
C2122HPF1	76.200	47.60	29.00	17.81	12.70	43.3	44.7	38.1	4.80	53.3/12123	59.2	7.05	B

Buchsenketten
Bush chains
Chaînes tubulaires

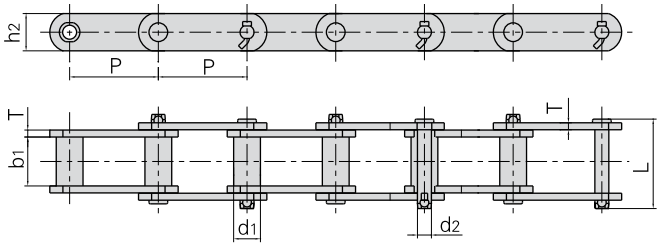

ANSI Chain No. *ANSI Ketten Nr.*	Donghua Chain No. *Donghua Ketten Nr.*	Pitch *Teilung* P mm	Bush diameter *Buchsen-durch-messer* d_1 max mm	Width between inner plates *Innere Breite* b_1 min mm	Pin diameter *Bolzen-durch-messer* d_2 max mm	Pin length *Bolzen-länge* L max mm	Plate depth *Laschen-höhe* h_2 max mm	Plate thickness *Laschen-dicke* T max mm	Ultimate tensile strength *Min. Bruchkraft* Q min kN/LB	Average tensile strength *Durchschn. Bruchkraft* Q_0 kN	Weight per meter *Gewicht* q kg/m
S102B		101.60	25.40	54.10	15.88	111.3	38.10	9.7	160.0/35993	176.0	10.4
S110		152.40	32.00	54.10	15.88	111.3	38.10	9.7	160.0/35993	176.0	9.8
S111		120.90	36.60	66.80	19.05	131.2	50.80	9.7	214.0/48141	235.4	15.9
S131		78.11	32.00	33.50	15.88	90.5	38.10	9.7	160.0/35993	176.0	11.6
S150		153.67	44.70	84.30	25.40	164.6	63.50	12.7	378.0/85034	416.0	25.7
S188		66.27	22.40	26.90	12.70	68.6	28.40	6.4	102.0/22946	112.2	5.6
S856		152.40	44.40	76.20	25.40	154.9	63.50	12.7	365.0/82110	401.5	25.0
S857		152.40	44.40	76.20	25.40	154.9	82.60	12.7	432.0/97182	475.2	32.0
S859		152.40	60.40	95.30	31.75	188.5	101.60	16.0	690.0/155221	759.0	55.9
S864		177.80	60.40	95.30	31.75	188.5	101.60	16.0	690.0/155221	759.0	51.8
	S102.5	102.36	34.93	57.15	19.05	115.0	44.45	9.5	214.0/48141	235.4	14.09
	S110F1	152.40	31.75	53.48	15.88	111.0	44.45	9.5	160.0/35993	176.0	10.50
	S111F1	120.90	36.51	66.68	19.05	125.0	50.80	9.5	214.0/48141	235.4	15.46

Anbauteile für Buchsenketten
Attachments for bush chains
Pattes d'attache pour chaînes tubulaires

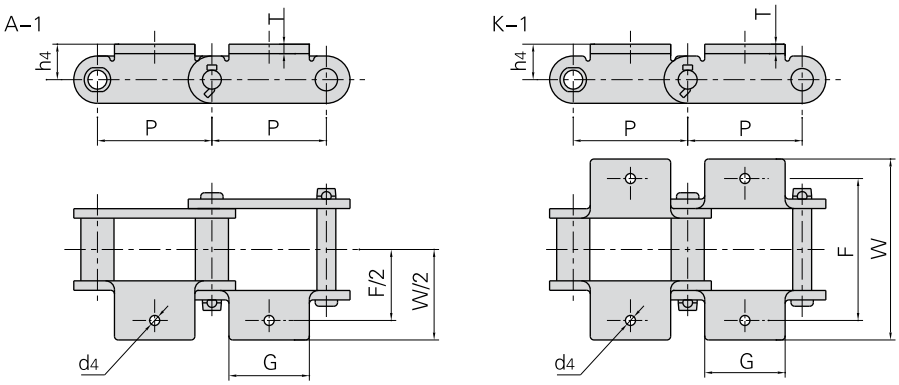

ANSI Chain No. *ANSI Ketten Nr.*	P mm	G mm	F mm	W mm	h_4 mm	d_4 mm	T mm
*S102B	101.60	77.0	121.0	180.8	25.4	10.2	9.7
S131	78.11	73.9	104.6	157.0	25.4	13.5	9.7
S188	66.27	54.6	95.2	131.6	20.6	10.2	6.4

*S102B only with A-1 attachments
**S102B nur mit A-1 Befestigungslaschen*

Anbauteile für Buchsenketten
Attachments for bush chains
Pattes d'attache pour chaînes tubulaires

A–2

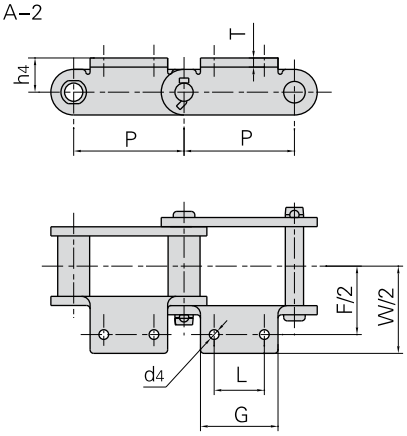

K–2

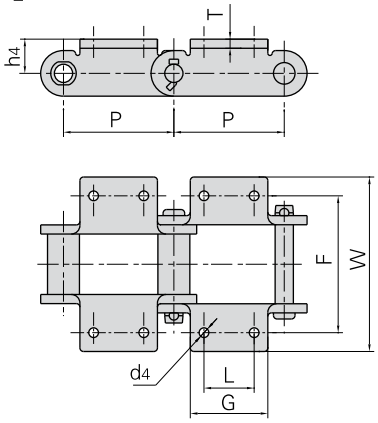

ANSI Chain No. *ANSI Ketten Nr.*	Donghua Chain No. *Donghua Ketten Nr.*	P	L	G max	F	W max	h_4	d_4 min	T
		mm	mm	mm	mm	mm	mm	mm	mm
S102B		101.60	44.50	69.9	134.90	180.80	25.40	10.2	9.7
S110		152.40	44.50	89.6	134.90	180.80	25.40	10.2	9.7
S111		120.90	58.70	92.7	158.80	210.80	38.10	13.5	9.7
S131		78.11	38.10	73.9	104.60	157.00	25.40	13.5	9.7
S150		153.67	69.90	108.7	190.50	249.40	47.80	13.5	12.7
S188		66.27	31.80	54.6	106.40	131.60	20.60	8.6	6.4
S856		152.40	63.50	103.1	184.20	241.30	47.80	16.8	12.7
	S102.5	102.36	44.45	69.0	136.53	163.51	28.58	9.5	9.5
	S110F1	152.40	44.45	88.9	134.94	165.10	27.78	10.3	9.5
	S111F1	120.90	58.70	87.5	158.75	196.85	38.10	13.7	9.5

A–22

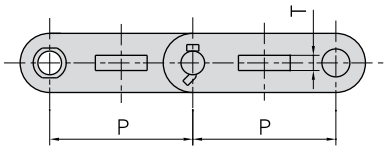

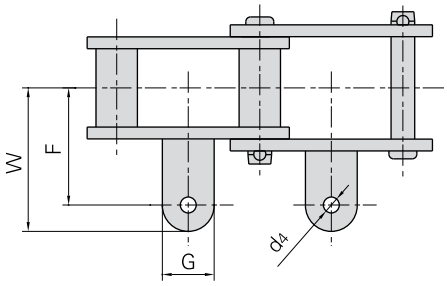

ANSI Chain No. *ANSI Ketten Nr.*	P	G	F	W	d_4	T
	mm	mm	mm	mm	mm	mm
S188	66.27	49.2	45.2	61.2	10.2	10.4

Anbauteile für Buchsenketten
Attachments for bush chains
Pattes d'attache pour chaînes tubulaires

K–3

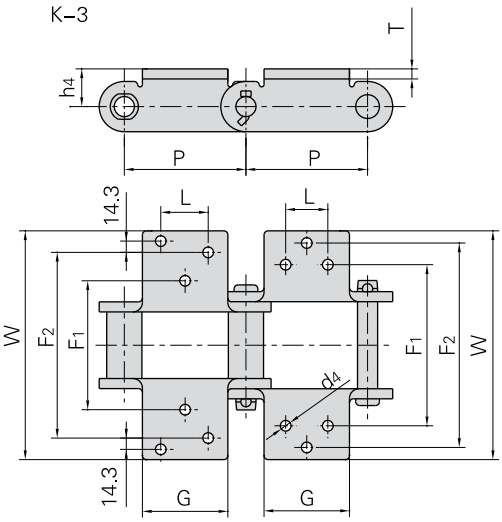

ANSI Chain No. *ANSI Ketten Nr.*	P	G	L	F_1	F_2	W	h_4	d_4	T
	mm	mm	mm	mm	mm	mm	mm	mm	mm
S150	153.67	109.5	69.9	190.5	292.1	347.5	47.8	13.5	13.5
S856	152.40	152.4	69.9	166.6	277.9	349.3	47.8	13.5	13.5

K–35

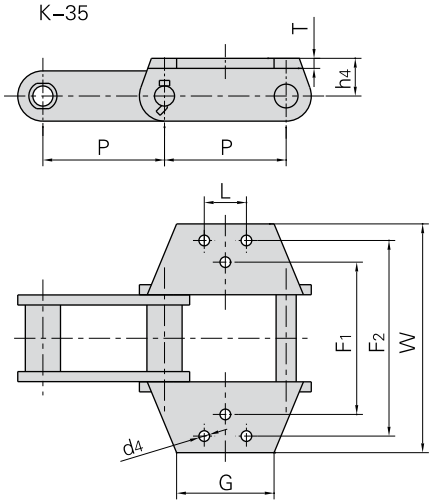

ANSI Chain No. *ANSI Ketten Nr.*	P	G	L	F_1	F_2	W	h_4	d_4	T
	mm	mm	mm	mm	mm	mm	mm	mm	mm
S856	152.4	146.1	63.5	184.2	298.5	349.3	47.8	16.8	13.5

K–44

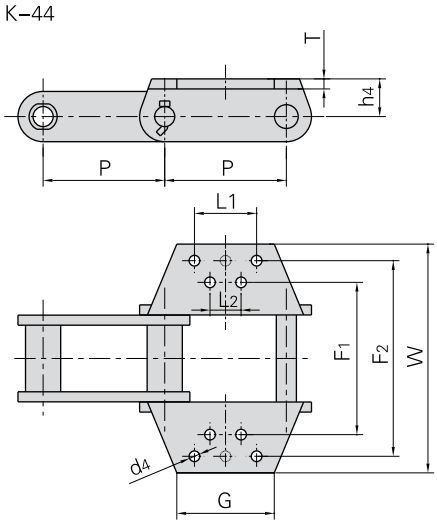

ANSI Chain No. *ANSI Ketten Nr.*	P	G	L_1	L_2	F_1	F_2	W	h_4	d_4	T
	mm	mm	mm	mm	mm	mm	mm	mm	mm	mm
S857	152.4	146.1	88.9	88.9	177.8	304.8	355.6	63.5	13.5	13.5
S859	152.4	146.1	114.3	69.9	228.6	330.2	381.0	76.2	16.8	13.5
S864	177.8	146.1	139.7	95.3	228.6	330.2	381.0	76.2	16.8	13.5

KÖBO-DONGHUA

The Chain People

Fahrtreppenketten
Escalator-step chains
Chaînes pour escaliers mécaniques

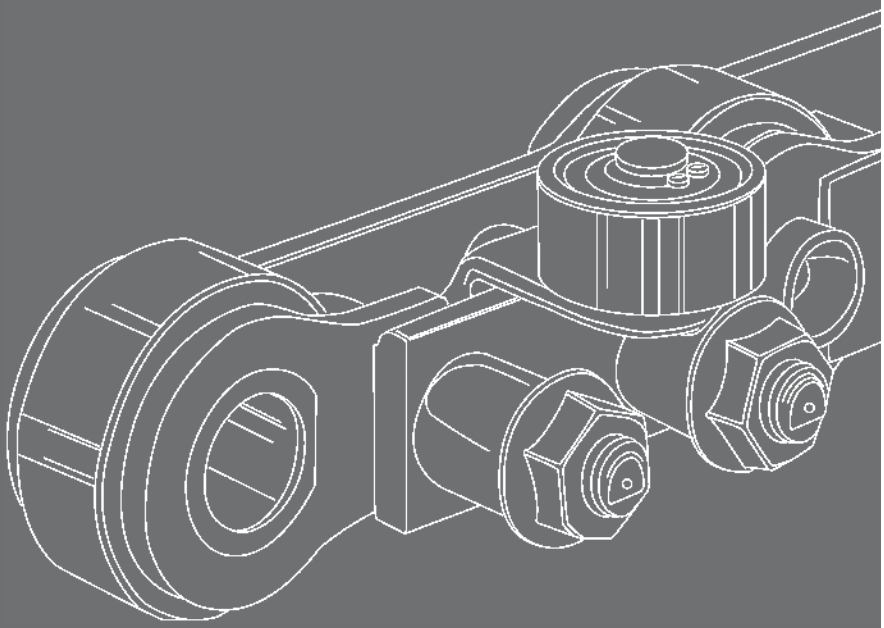

Zertifiziert nach DIN EN ISO 9001

Fahrtreppenketten
Escalator-step chains
Chaînes pour escaliers mécaniques

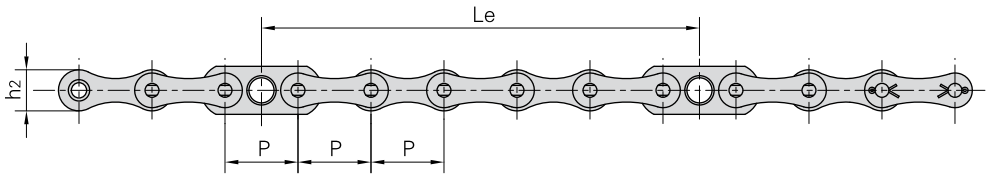

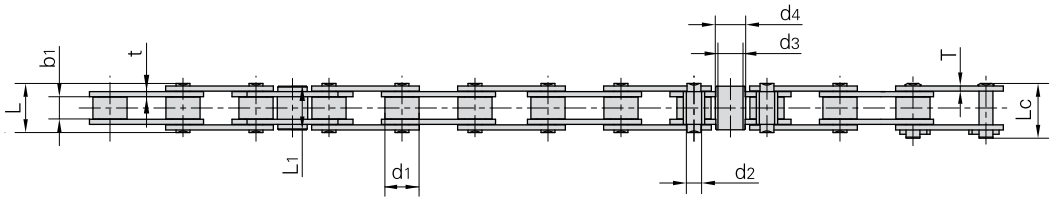

Donghua Chain No. *Donghua Ketten Nr.*	Pitch *Teilung*	Roller diameter *Rollen-durch-messer*	Width between inner plates *Innere Breite*	Pin diameter *Bolzen-durch-messer*	Pin length *Bolzen-länge*		Bush diameter *Buchsen-durch-messer*		Bush length *Buchsen-länge*	Plate dimension *Laschen-abmess-ungen*		Distamce between steps (six pitches) *Abstand zwischen Stufen (6Teilungen)*	Ultimate tensile strength *Min. Bruchkraft*	Average tensile strength *Durchschn. Bruchkraft*	Weight per step *Gewicht pro Stufe*
	P	d_1 max	b_1 min	d_2	L max	Lc max	d_3	d_4	L_1 max	h_2 max	t/T	Le	Q min	Q_0	q
	mm	mm	mm	mm	mm	mm	mm	mm	mm	mm	mm	mm	kN/LB	kN	kg
C–13T	68.40	32.0	20.6	14.29	45.0	50.85	23.5	28.5	40.85	38.5	4.8	410.4	127.4/28640	140.0	2.30
P67–FD	67.73	28.5	27.0	14.29	52.3	57.00	23.0	27.0	36.85	38.0	4.8	406.4	130.0/299225	140.0	2.19
C–16V	68.40	28.0	29.6	14.29	53.9	59.60	22.0	26	29.35	39.6	4.8	410.4	161.7/36351	178.0	2.38
C–12V	68.40	28.0	20.7	12.70	41.9	47.40	21.0	26	30.50	39.6	4.0	410.4	140.0/31473	154.0	1.82
C–8V	68.40	28.0	20.7	12.70	41.9	47.40	21.0	26	30.50	39.6	4.0	410.4	100.0/224809	110.0	1.82
ST67HF2	67.73	28.5	27.0	14.63	52.7	57.00	23.0	27	36.85	40.0	4.8/5.5	406.4	186.2/41859	204.0	2.31
ST67HF1	67.73	28.5	27.0	14.63	52.7	57.00	23.0	27	36.85	40.0	4.8/5.5	406.4	160.0/35969	176.0	2.31

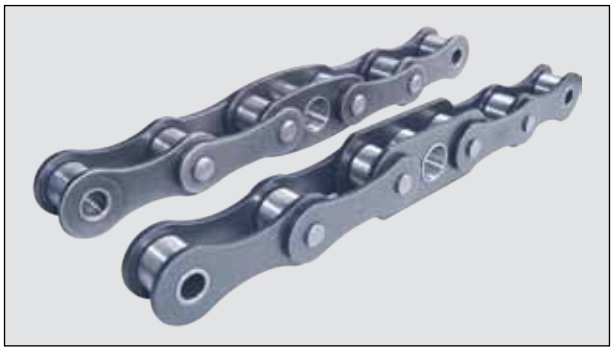

Fahrtreppenketten
Escalator-step chains
Chaînes pour escaliers mécaniques

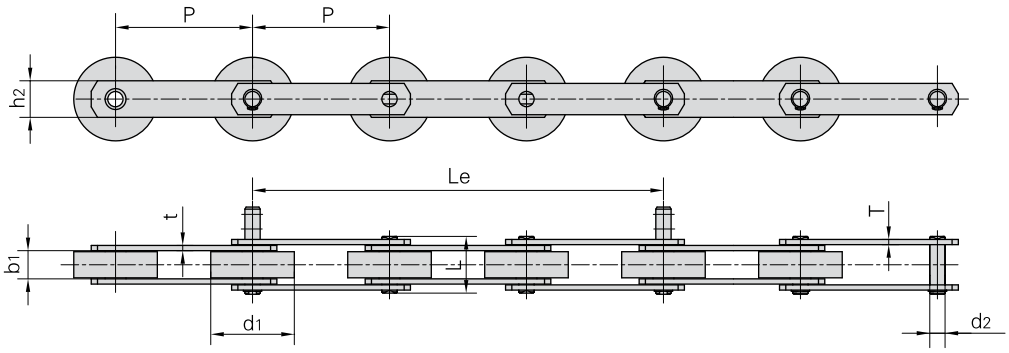

Donghua Chain No. *Donghua Ketten Nr.*	Pitch *Teilung*	Roller diameter *Rollen-durch-messer*	Width between inner plates *Innere Breite*	Pin diameter *Bolzen-durch-messer*	Pin length *Bolzen-länge*	Inner plate depth *Innen-laschen-höhe*	Plate thickness *Laschen-dicke*	Distance between steps (three pitches) *Abstand zwischen Stufen (3 Teilungen)*	Ultimate tensile strength *Min. Bruchkraft*	Average tensile strength *Durchschn. Bruchkraft*	Weight per step *Gewicht pro Stufe*
	P	d_1 max	b_1 min	d_2 max	L max	h_2	t / T max	Le	Q min	Q_0	q
	mm	mm	mm	mm	mm	mm	mm	mm	kN/LB	kN	kg
ST131	131.33	80.00	27.0	24.00	54.5	50.0	5.0	394.00	180.0/40465	198.0	3.70
T131	131.33	80.00	27.0	14.63	54.5	50.0	5.0	394.00	180.0/40465	198.0	2.48
JJT131	131.33	80.00	27.0	14.63	56.5	35.0	5.0	394.00	123.0/27651	150.0	2.31
ST133	133.33	70.00	27.0	14.63	55.0	40.0	5.0	400.00	180.0/40465	198.0	2.45
JJT133	133.33	70.00	27.0	14.63	56.5	35.0	5.0	400.00	127.4/28640	140.1	2.38
ST133F1	133.33	80.00	27.0	24.00	54.5	50.0	5.0	400.00	180.0/40465	198.0	3.53
ST133F3	133.33	75.00	25.4	14.63	54.2	35.0	5.0	400.00	123/27651	135.3	2.16
ST133F4	133.33	76.20	27.0	14.63	55.0	40.0	5.0	400.00	180/40465	198.0	2.50
ST133F5	133.33	39.37	33.7	22.00	70.0	60.0	7.0/6.0	400.00	350/78683	385.0	4.78
ST133F6	133.33	39.37	33.7	16.00	65.0	50.0	5.0	400.00	170/38217	187.0	3.36
JJT131F1	131.33	76.20	23.6	12.70	52.0	35.0	5.0	394.00	90/20232	99.0	2.05
JJT131F2	131.33	76.20	23.6	12.70	52.0	35.0	5.0	394.00	90/20232	99.0	2.05
JJT131F3	131.33	76.20	23.6	15.00	52.0	35.0	5.0	394.00	123/27651	135.3	2.20
JJT131F4	131.33	76.20	23.6	15.00	52.0	35.0	5.0	394.00	123/27651	135.3	2.20
ST135F2	135.47	76.20	23.6	12.7/15	54.2	35.0	5.0	406.40	90/20232	99.0	2.05

Fahrtreppenketten
Escalator-step chains
Chaînes pour escaliers mécaniques

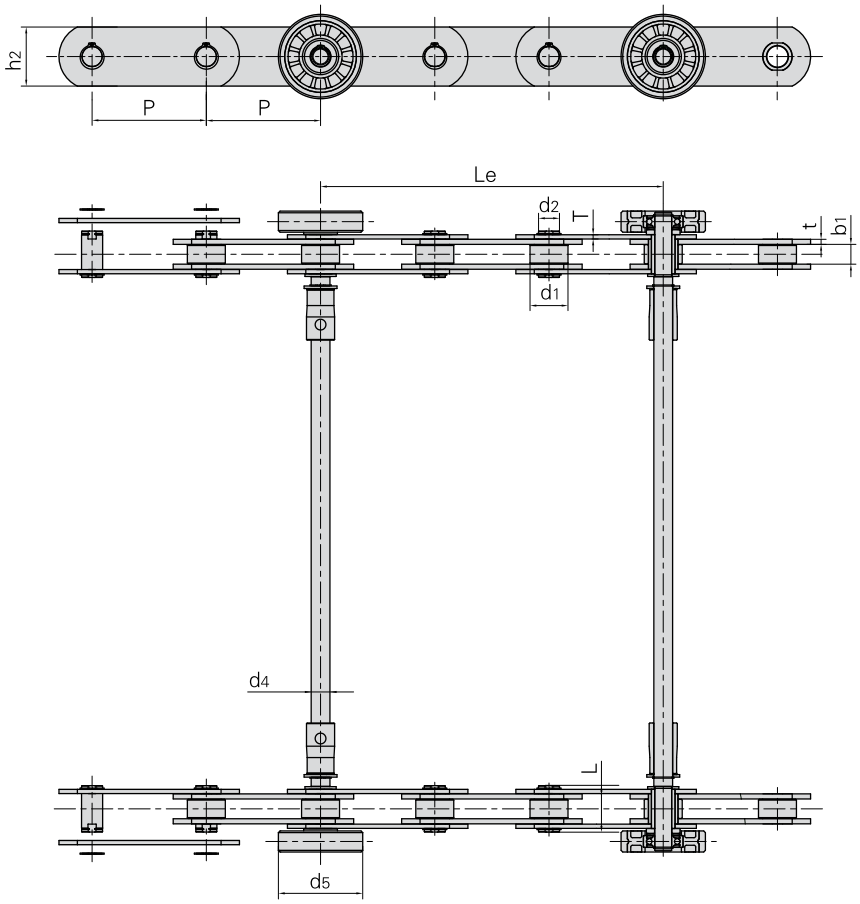

Donghua Chain No. *Donghua Ketten Nr.*	Pitch *Teilung* P	Roller diameter *Rollen-durch-messer* d_1	Width between inner plates *Innere Breite* b_1	Pin diameter *Bolzen-durch-messer* d_2	Pin length *Bolzen-länge* L	Inner plate depth *Innen-laschen-höhe* h_2	Plate thickness *Laschen-dicke* t/T	Distance between steps (three pitches) *Abstand zwischen Stufen (3 Teilungen)* Le	Axle diameter *Stufenbolzen-durchmesser* d_4	Bearing roller diameter *Laufrollen-durch-messer* d_5	Ultimate tensile strength *Min. Bruchkraft* Q min
	mm	mm	mm	mm	mm	mm	mm	mm	mm	mm	kN/LB
PT135HPF4	135.466	45	23.5	25	55	70	6.0/5.0	406.4	22.226	100	250/56240

Fahrtreppenketten
Escalator-step chains
Chaînes pour escaliers mécaniques

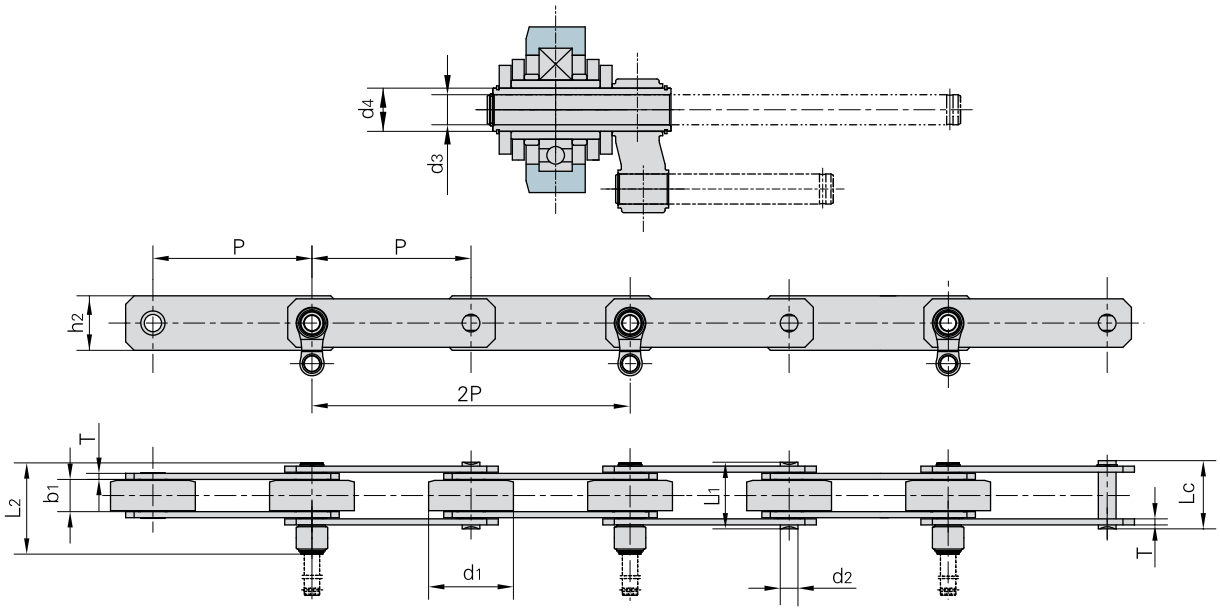

Donghua Chain No. *Donghua Ketten Nr.*	Pitch *Teilung*	Roller diameter *Rollen-durch-messer*	Width between inner plates *Innere Breite*	Pin diameter *Bolzen-durch-messer*	(Hollow) Pin diameter *Hohlbolzen-durch-messer*		Pin length *Bolzen-länge*			Plate dimension *Laschen-abmessungen*		Ultimate tensile strength *Min. Bruchkraft*	Average tensile strength *Durchschn. Bruchkraft*	Weight per meter *Gewicht*
	P	d_1 max	b_1 min	d_2 max	d_3 min	d_4 max	L_1 max	L_2 max	Lc max	h_2 max	T max	Q min	Q_0	q
	mm	mm	mm	mm	mm	mm	mm	mm	mm	mm	mm	kN /LB	kN	kg/m
PT131HP	131.33	70.0	27.0	14.63	12.7	18.26	55.0	75.3	56.0	40.0	5.0	150.0/34089	165.0	7.53

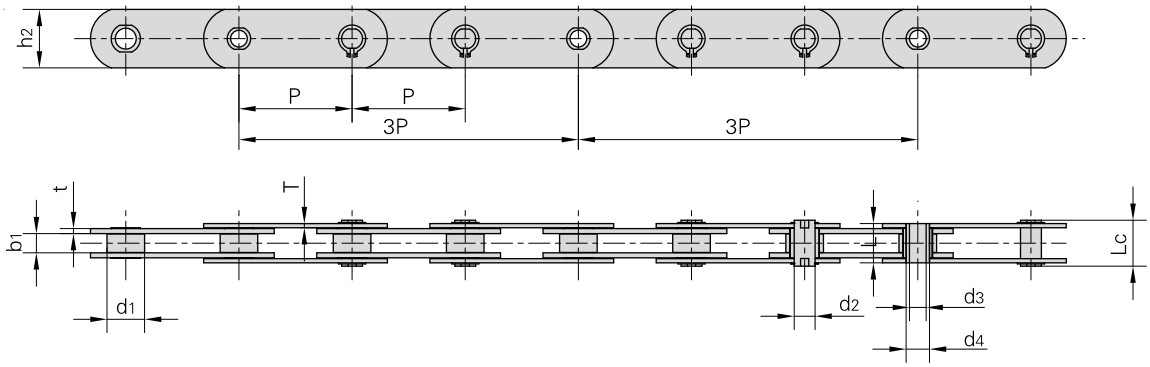

Donghua Chain No. *Donghua Ketten Nr.*	Pitch *Teilung*	Roller diameter *Rollen-durch-messer*	Width between inner plates *Innere Breite*	Pin diameter *Bolzen-durch-messer*	(Hollow) Pin diameter *Hohlbolzen-durch-messer*		Pin length *Bolzen-länge*		Plate dimension *Laschen-abmessungen*		Ultimate tensile strength *Min. Bruchkraft*	Average tensile strength *Durchschn. Bruchkraft*	Weight per meter *Gewicht*
	P	d_1 max	b_1 min	d_2 max	d_3 min	d_4 max	L max	Lc max	h_2	t/T max	Q min	Q_0	q
	mm	mm	mm	mm	mm	mm	mm	mm	mm	mm	kN/LB	kN	kg/m
PT135HP	135.46	45.0	23.0	25.0	20.0	28.0	47.1	55.1	70.0	6.0/5.0	250.0/56818	275.0	11.26

Fahrtreppenketten
Escalator-step chains
Chaînes pour escaliers mécaniques

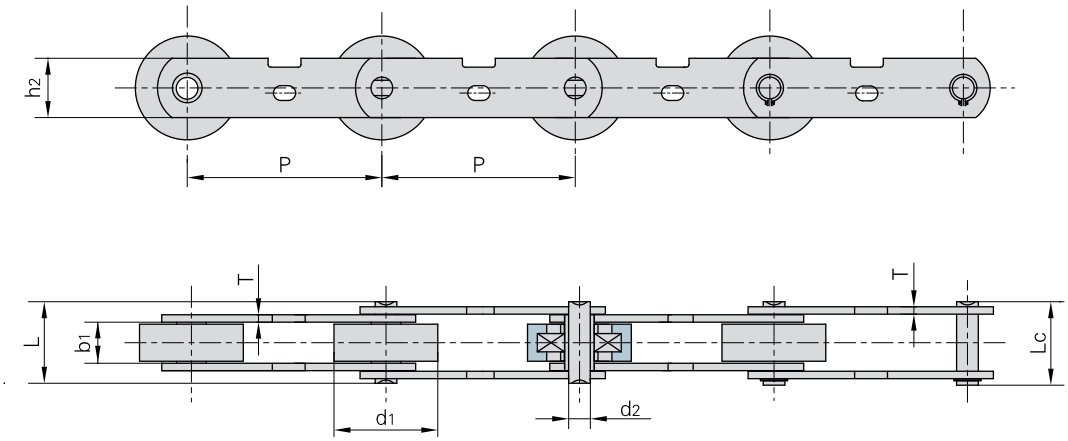

Donghua Chain No. *Donghua Ketten Nr.*	Pitch *Teilung*	Roller diameter *Rollen-durch-messer*	Width between inner plates *Innere Breite*	Pin diameter *Bolzen-durch-messer*	Pin length *Bolzen-länge*		Inner plate depth *Innen-laschen-höhe*	Plate thickness *Laschen-dicke*	Ultimate tensile strength *Min. Bruchkraft*	Average tensile strength *Durchschn. Bruchkraft*	Weight per meter *Gewicht*
	P	d_1 max	b_1 min	d_2 max	L max	Lc max	h_2 max	T max	Q min	Q_0	q
	mm	mm	mm	mm	mm	mm	mm	mm	kN/LB	kN	kg/m
PT131	131.33	70.0	27.0	14.63	55.0	56.0	40.0	5.0	180.0/40909	198.0	5.97
PT133	133.33	70.0	27.0	14.63	55.0	56.0	40.0	5.0	180.0/40909	198.0	5.75

KÖBO-DONGHUA

The Chain People

Förderketten für die Stahlindustrie

Conveyor chains for steel mill

Chaînes de manutention pour la sidérurgie

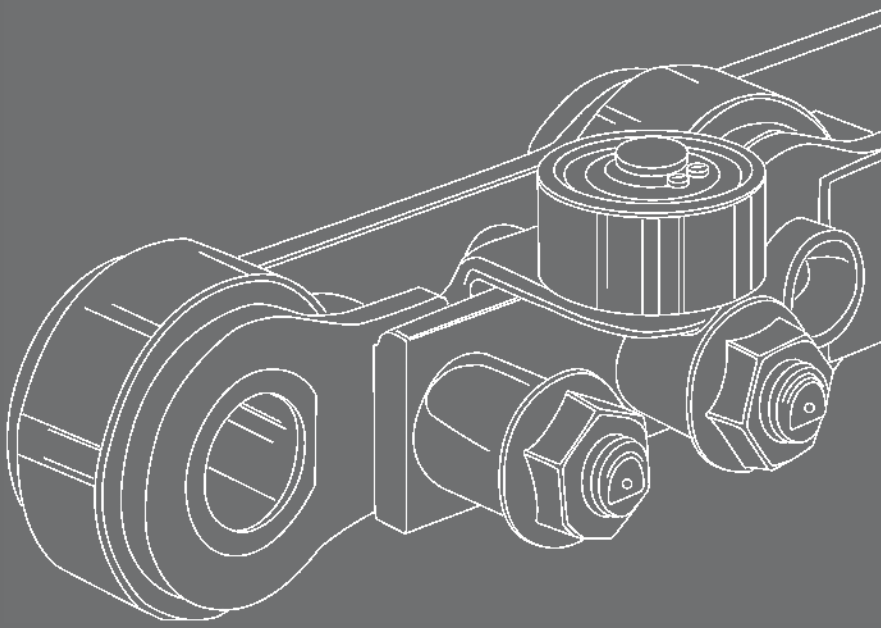

Zertifiziert nach DIN EN ISO 9001

Förderketten für die Stahlindustrie
Conveyor chains for steel mill
Chaînes de manutention pour la sidérurgie

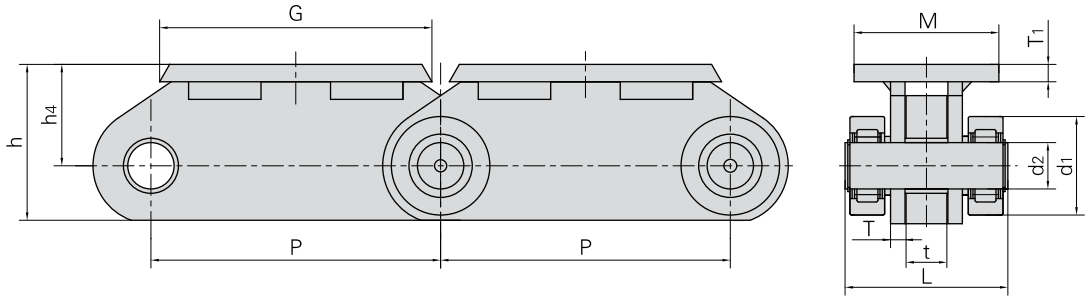

Donghua Chain No. / *Donghua Ketten Nr.*	Pitch / *Teilung*	Roller diameter / *Rollen-durch-messer*	Pin diameter / *Bolzen-durch-messer*	Pin length / *Bolzen-länge*	Plate thickness / *Laschen-dicke*	Attachment dimension / *Befestigungs-laschen-abmessungen*					Ultimate tensile strength / *Min. Bruchkraft*
	P	d_1 max	d_2 max	L max	t/T max	G	M	h_4	h	T_1	Q min
	mm	mm	mm	mm	mm	mm	mm	mm	mm	mm	kN/LB
P500	500	170	80	281	50/25	470	250	175	269	30	1900/427419

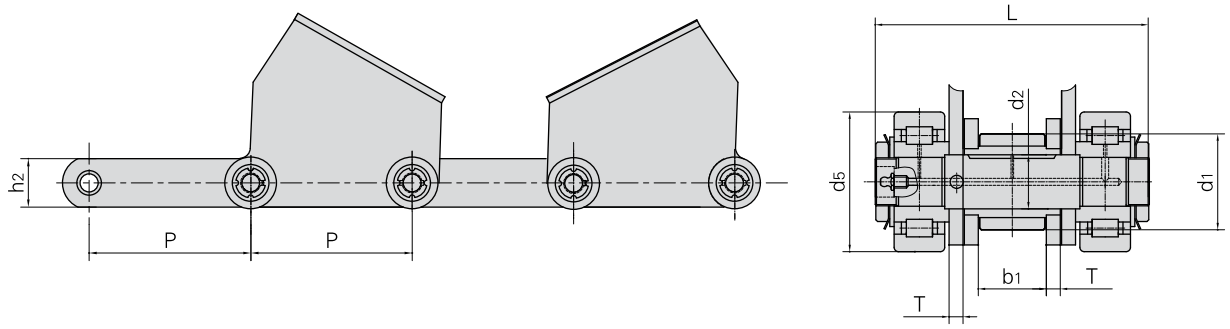

Donghua Chain No. / *Donghua Ketten Nr.*	Pitch / *Teilung*	Roller diameter / *Rollen-durch-messer*		Width between inner plates / *Innere Breite*	Pin diameter / *Bolzen-durch-messer*	Pin length / *Bolzen-länge*	Plate thickness / *Laschen-dicke*	Plate depth / *Laschen-höhe*	Ultimate tensile strength / *Min. Bruchkraft*
	P	d_1 max	d_5 max	b_1 min	d_2 max	L max	T max	h_2	Q min
	mm	mm	mm	mm	mm	mm	mm	mm	kN/LB
P500F1	500	107	160	78	62	325	20	150	800/179966

Förderketten für die Stahlindustrie
Conveyor chains for steel mill
Chaînes de manutention pour la sidérurgie

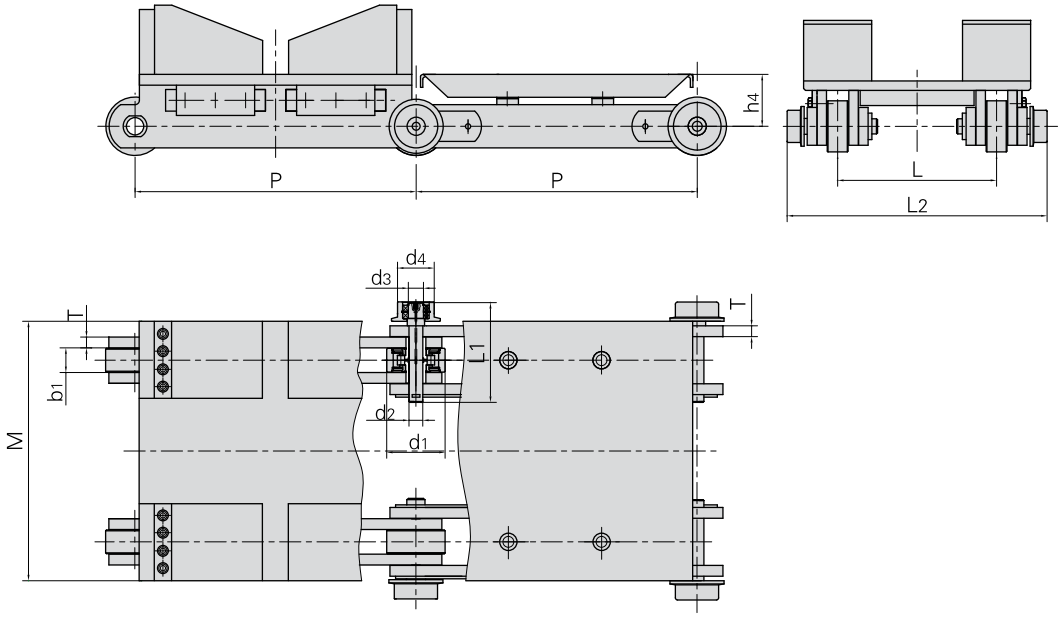

Donghua Chain No. *Donghua Ketten Nr.*	Pitch *Teilung*	Roller diameter *Rollen-durch-messer*		Width between inner plates *Innere Breite*	Pin diameter *Bolzen-durch-messer*		Pin length *Bolzen-länge*	Plate thickness *Laschen-dicke*	Attachment dimension *Befestigungs-laschen-abmessungen*				Ultimate tensile strength *Min. Bruchkraft*	Weight per meter *Gewicht*
	P	d_1 max	d_4 max	b_1 min	d_2 max	d_3 max	L_1 max	T max	L	L_2	M	h_4	Q min	q
	mm	mm	mm	mm	mm	mm	mm	mm	mm	mm	mm	mm	kN/LB	kg/m
P650	650	135	85	56	32	35	232	25	420	690	600	120	750/168718	214.5

Förderketten für die Stahlindustrie
Conveyor chains for steel mill
Chaînes de manutention pour la sidérurgie

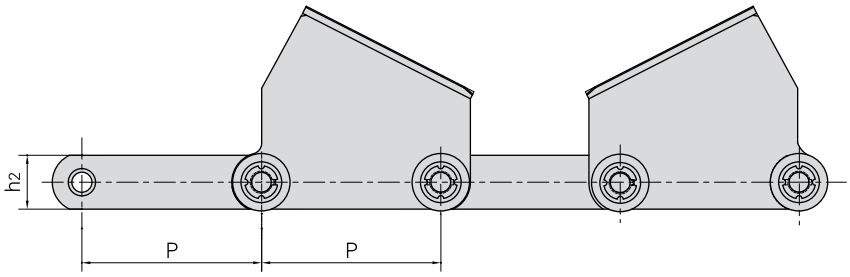

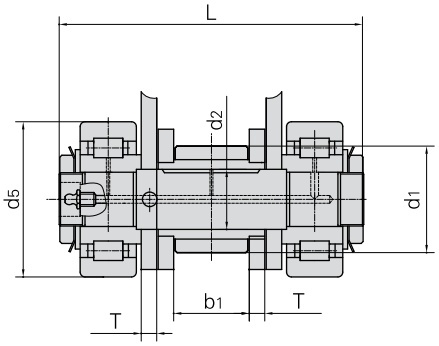

Donghua Chain No. *Donghua Ketten Nr.*	Pitch *Teilung*	Roller diameter *Rollen-durch-messer*		Width between inner plates *Innere Breite*	Pin diameter *Bolzen-durch-messer*	Pin length *Bolzen-länge*	Plate thickness *Laschen-dicke*	Plate depth *Laschen-höhe*	Ultimate tensile strength *Min. Bruchkraft*
	P	d_1 max	d_5 max	b_1 min	d_2 max	L max	T max	h_2	Q min
	mm	mm	mm	mm	mm	mm	mm	mm	kN/LB
P500F2	500	107	160	76	62	310	16	150	700/157470

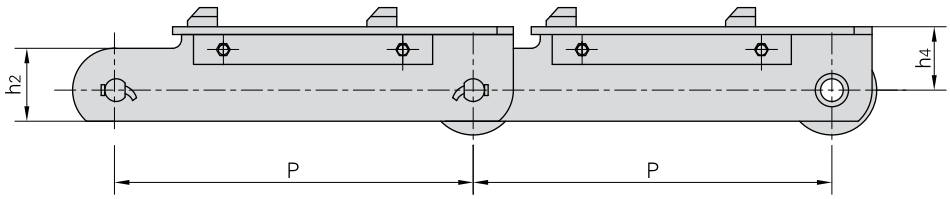

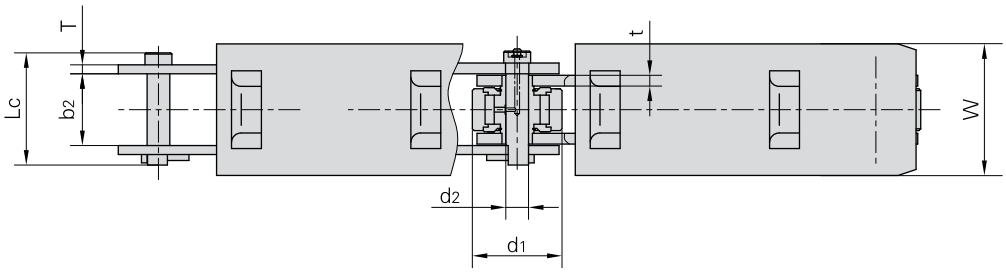

Donghua Chain No. *Donghua Ketten Nr.*	Pitch *Teilung*	Roller diameter *Rollen-durch-messer*	Width between outer plates *Breite zwischen den Außenlaschen*	Pin diameter *Bolzen-durch-messer*	Pin length *Bolzen-länge*	Plate depth *Laschen-höhe*	Plate thickness *Laschen-dicke*	Attachment dimension *Befestigungs-laschen-abmessungen*		Average tensile strength *Durchschn. Bruchkraft*
	P	d_1 max	b_2 min	d_2 max	Lc max	h_2	t/T max	h_4	W	Q_0
	mm	mm	mm	mm	mm	mm	mm	mm	mm	kN/LB
P600F1	600	150	117	38	187	122	18/15	105.7	220	1470/330687

Förderketten für die Stahlindustrie
Conveyor chains for steel mill
Chaînes de manutention pour la sidérurgie

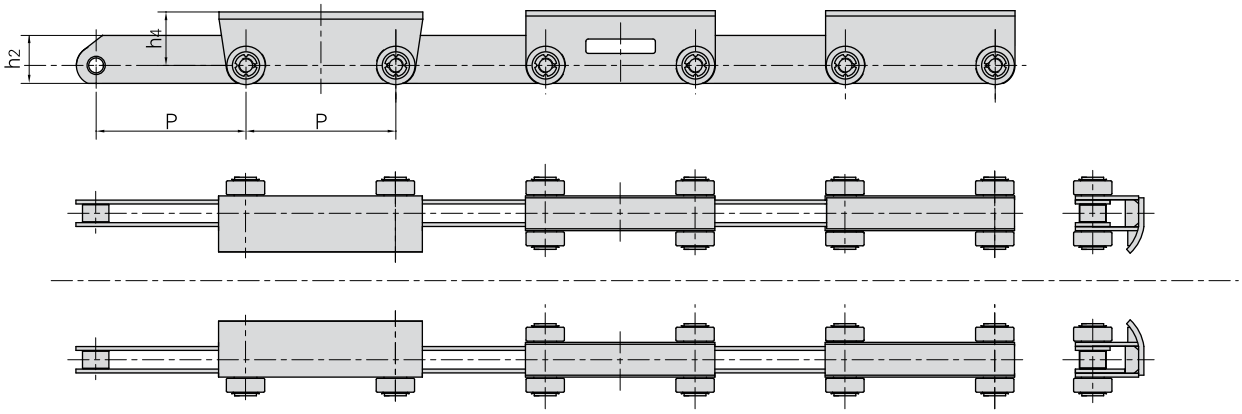

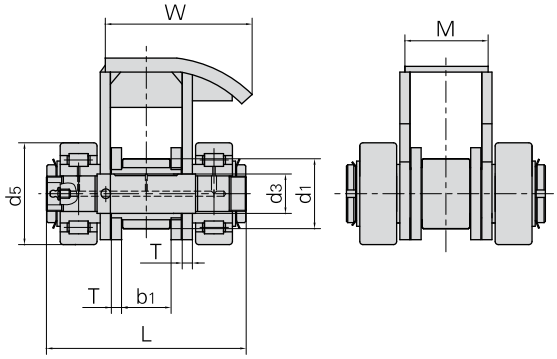

Donghua Chain No. *Donghua Ketten Nr.*	Pitch *Teilung*	Roller diameter *Rollen-durch-messer*		Width between inner plates *Innere Breite*	Pin diameter *Bolzen-durch-messer*	Pin length *Bolzen-länge*	Plate thickness *Laschen-dicke*	Attachment dimension *Befestigungs-laschen-abmessungen*				Ultimate tensile strength *Min. Bruchkraft*
	P	d_1 max	d_5 max	b_1	d_3 max	L max	T max	W	M	h_2	h_4	Q min
	mm	mm	mm	mm	mm	mm	mm	mm	mm	mm	mm	kN/LB
P625	625	107	160	78	62	310	16	227.5	130	200	215	700/157470

Förderketten für die Stahlindustrie
Conveyor chains for steel mill
Chaînes de manutention pour la sidérurgie

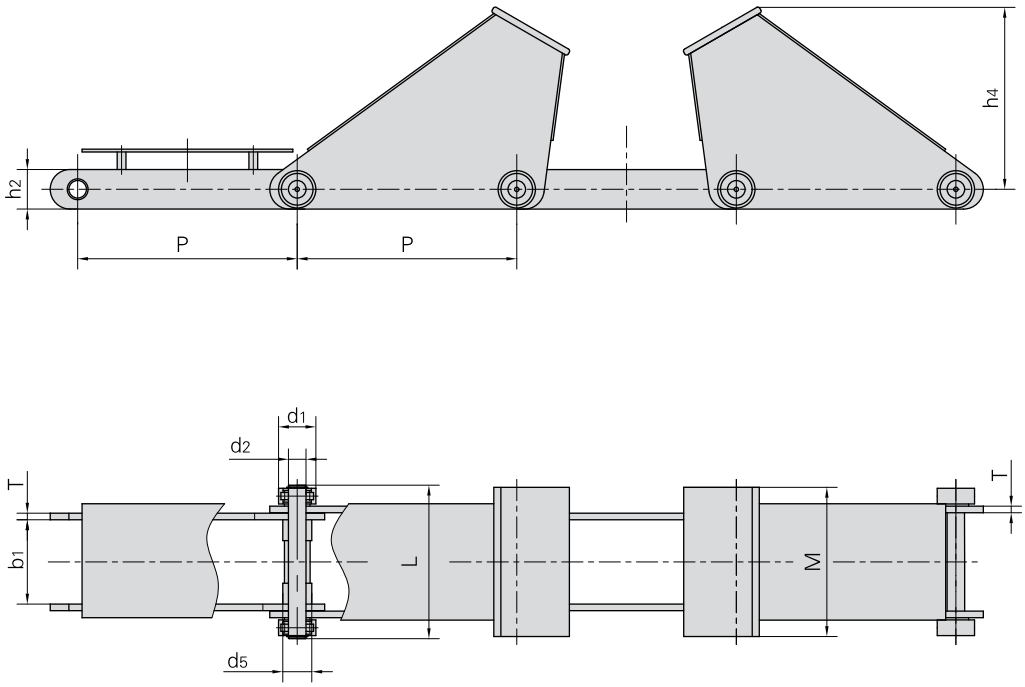

Donghua Chain No. *Donghua Ketten Nr.*	Pitch *Teilung*	Roller diameter *Rollen-durch-messer*		Width between inner plates *Innere Breite*	Pin diameter *Bolzen-durch-messer*	Plate depth *Laschen-höhe*	Pin length *Bolzen-länge*	Plate thickness *Laschen-dicke*	Attachment dimension *Befestigungs-laschen-abmessungen*		Ultimate tensile strength *Min. Bruchkraft*
	P	d_1 max	d_5 max	b_1 min	d_2 max	h_2	L max	T max	h_4	M	Q min
	mm	mm	mm	mm	mm	mm	mm	mm	mm	mm	kN/LB
P1000	1000	170	110	384	80	180	678	30	832	680	1800/404923

Förderketten für die Stahlindustrie
Conveyor chains for steel mill
Chaînes de manutention pour la sidérurgie

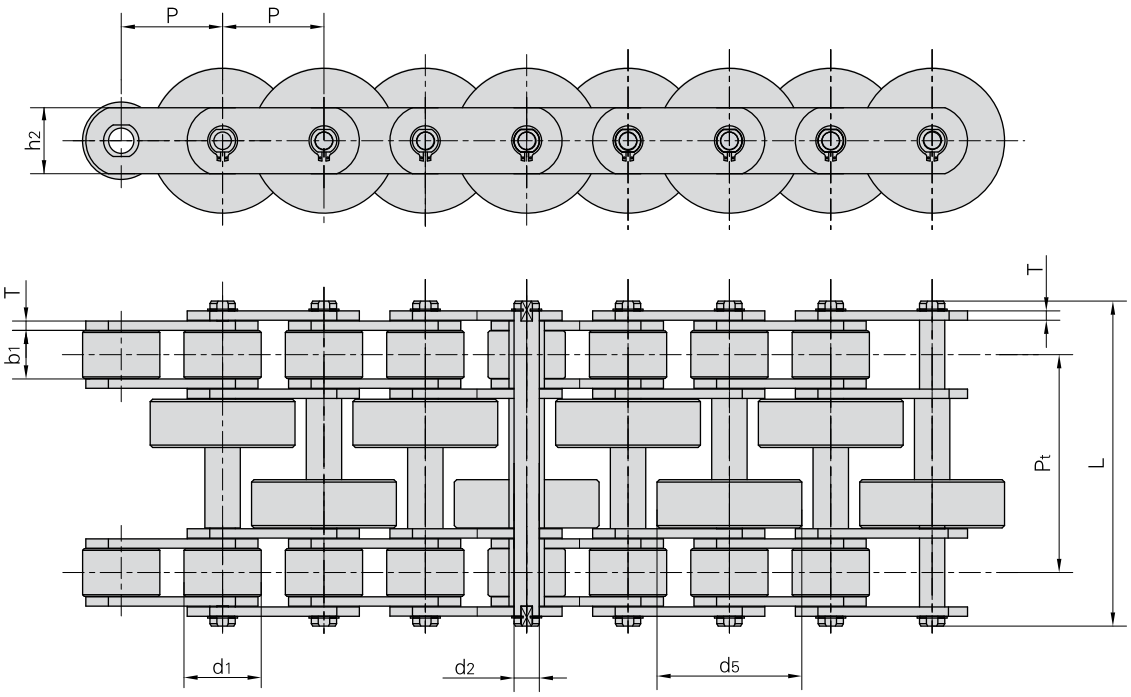

Donghua Chain No. *Donghua Ketten Nr.*	Pitch *Teilung*	Roller diameter *Rollen-durch-messer*		Width between inner plates *Innere Breite*	Pin diameter *Bolzen-durch-messer*	Pin length *Bolzen-länge*	Plate thickness *Laschen-dicke*	Plate depth *Laschen-höhe*	Transverse pitch *Mitten-abstand*	Ultimate tensile strength *Min. Bruchkraft*	Weight per meter *Gewicht*
	P	d_1 max	d_5 max	b_1 min	d_2 max	L max	T max	h_2 max	Pt	Q min	q
	mm	mm	mm	mm	mm	mm	mm	mm	mm	kN/LB	Kg/m
P63F4	63	48	90	30	15.88	202	6	41	135	200/44991	36.57

Förderketten für die Stahlindustrie
Conveyor chains for steel mill
Chaînes de manutention pour la sidérurgie

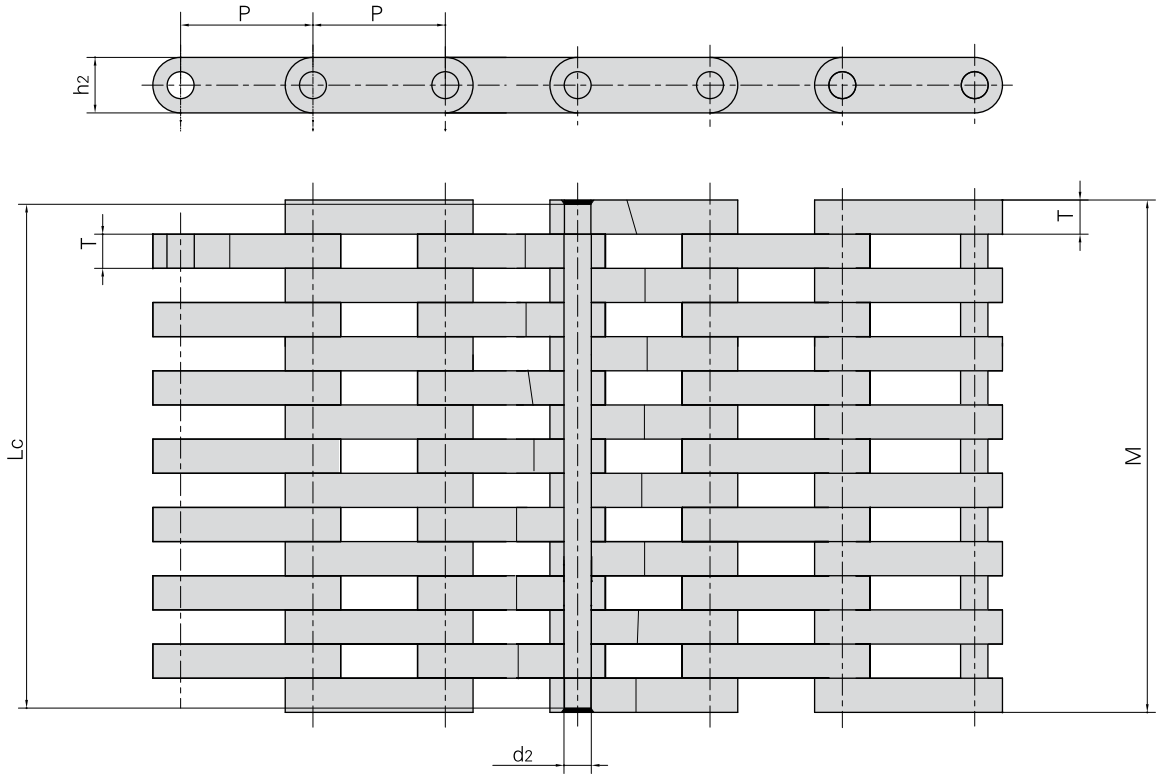

Donghua Chain No. *Donghua Ketten Nr.*	Pitch *Teilung*	Plate lacing *Laschen Kombination*	Pin diameter *Bolzen-durch-messer*	Pin length *Bolzen-länge*	Plate thickness *Laschen-dicke*	Plate dimension *Laschen-abmessungen*		Ultimate tensile strength *Min. Bruchkraft*	Average tensile strength *Durchschn. Bruchkraft*	Weight per meter *Gewicht*
	P		d_2 max	Lc max	T max	h_2	M	Q min	Q_0	q
	mm		mm	mm	mm	mm	mm	kN/LB	kN/LB	kg/m
LF155	155	7x8	31.5	595	40	65	605	3200/719864	3520/791851	202.2

Förderketten für die Stahlindustrie
Conveyor chains for steel mill
Chaînes de manutention pour la sidérurgie

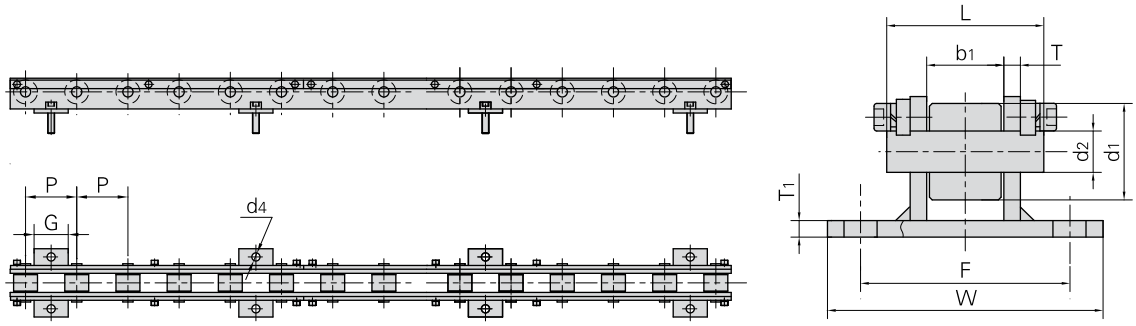

Donghua Chain No. *Donghua Ketten Nr.*	Pitch *Teilung*	Roller diameter *Rollen-durch-messer*	Width between inner plates *Innere Breite*	Pin diameter *Bolzen-durch-messer*	Pin length *Bolzen-länge*	Plate thickness *Laschen-dicke*	Attachment dimension *Befestigungs-laschen-abmessungen*					Weight per meter *Gewicht*
	P	d_1 max	b_1	d_2 max	L max	T max	T_1	W	F	d_4	G	q
	mm	mm	mm	mm	mm	mm	mm	mm	mm	mm	mm	Kg/m
P75F9	75	35	28	15	56	6	6	100	76	12	75	22.3

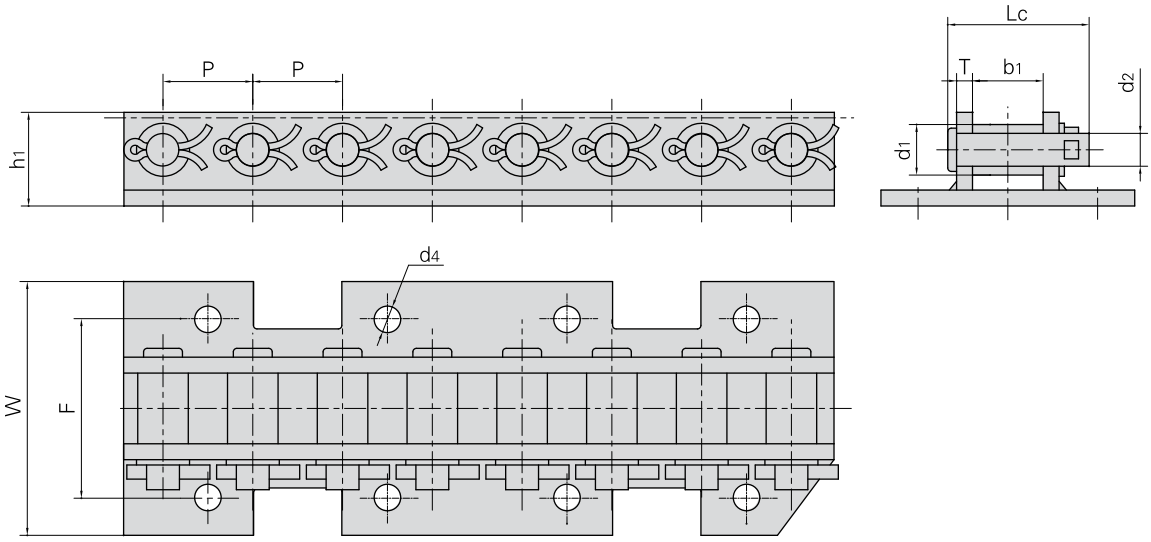

Donghua Chain No. *Donghua Ketten Nr.*	Pitch *Teilung*	Roller diameter *Rollen-durch-messer*	Width between inner plates *Innere Breite*	Pin diameter *Bolzen-durch-messer*	Pin length *Bolzen-länge*	Plate thickness *Laschen-dicke*	Attachment dimension *Befestigungs-laschen-abmessungen*				Ultimate tensile strength *Min. Bruchkraft*	Weight per meter *Gewicht*
	P	d_1 max	b_1	d_2 max	Lc max	T max	F	W	d_4	h_1	Q min	q
	mm	mm	mm	mm	mm	mm	mm	mm	mm	mm	kN/LB	kg/m
P50.8F10	50.8	28.6	40	18.5	80	9	101.6	143.6	15	53	193/43416	11.2

Förderketten für die Stahlindustrie
Conveyor chains for steel mill
Chaînes de manutention pour la sidérurgie

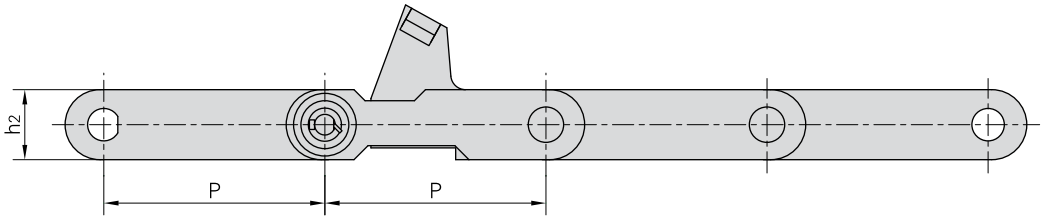

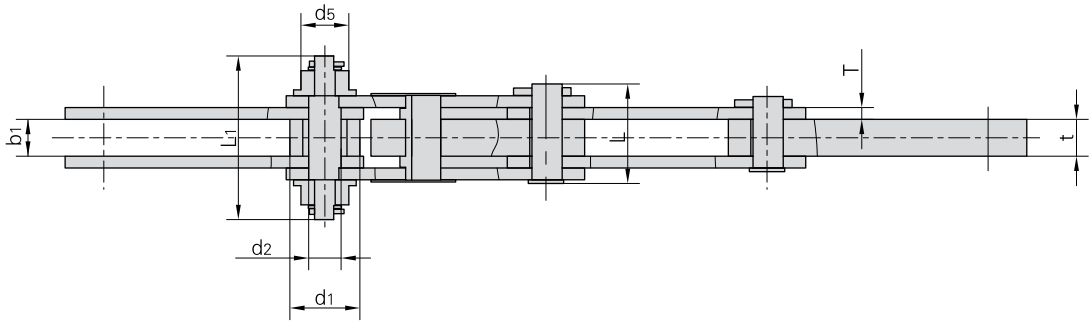

Donghua Chain No. *Donghua Ketten Nr.*	Pitch *Teilung*	Roller diameter *Rollen-durch-messer*		Width between inner plates *Innere Breite*	Pin diameter *Bolzen-durch-messer*	Pin length *Bolzen-länge*		Plate thickness *Laschen-dicke*	Ultimate tensile strength *Min. Bruchkraft*
	P	d_1 max	d_5 max	b_1 min	d_2 max	L max	L_1 max	t/T max	Q min
	mm	mm	mm	mm	mm	mm	mm	mm	kN/LB
P300F5	300	95	65	50	44	135	222	50/16	500/112478

KÖBO-DONGHUA

The Chain People

Kratzer-Förderketten

Scraper conveyor chains

Chaînes de manutention pour transporteurs à raclettes

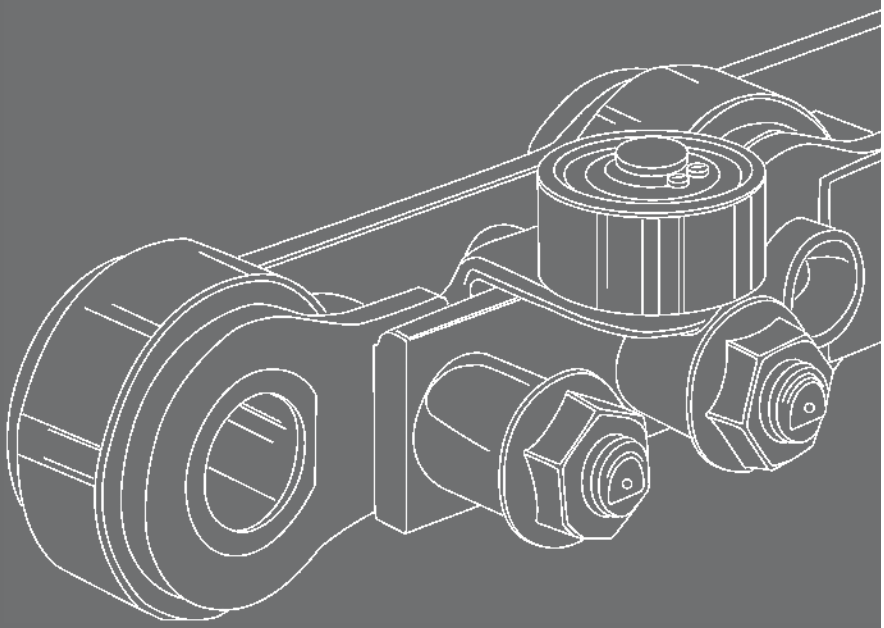

Zertifiziert nach DIN EN ISO 9001

Kratzer-Förderketten
Scraper conveyor chains
Chaînes de manutention pour transporteurs à raclettes

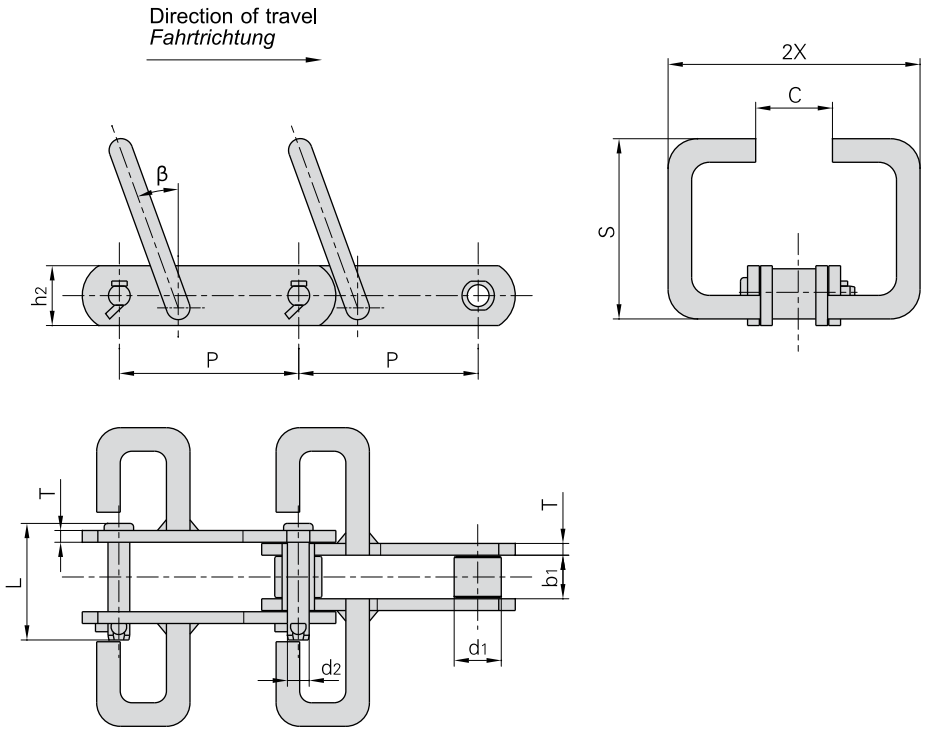

Donghua Chain No. *Donghua Ketten Nr.*	Pitch *Teilung*	Roller diameter *Rollen-durch-messer*	Width between inner plates *Innere Breite*	Pin diameter *Bolzen-durch-messer*	Pin length *Bolzen-länge*	Plate depth *Laschen-höhe*	Plate thickness *Laschen-dicke*	Attachment dimension *Befestigungs-laschen-abmessungen*				Ultimate tensile strength *Min. Bruchkraft*	Weight per meter *Gewicht*
	P	d_1 max	b_1	d_2	L	h_2	T	S	2X	C	β	Q	q
	mm	mm	mm	mm	mm	mm	mm	mm	mm	mm		kN/LB	kg/m
P152F51	152.4	40	36	18.5	95.5	50.8	10	175	310	110	20°	170/38242	24.9

Kratzer-Förderketten
Scraper conveyor chains
Chaînes de manutention pour transporteurs à raclettes

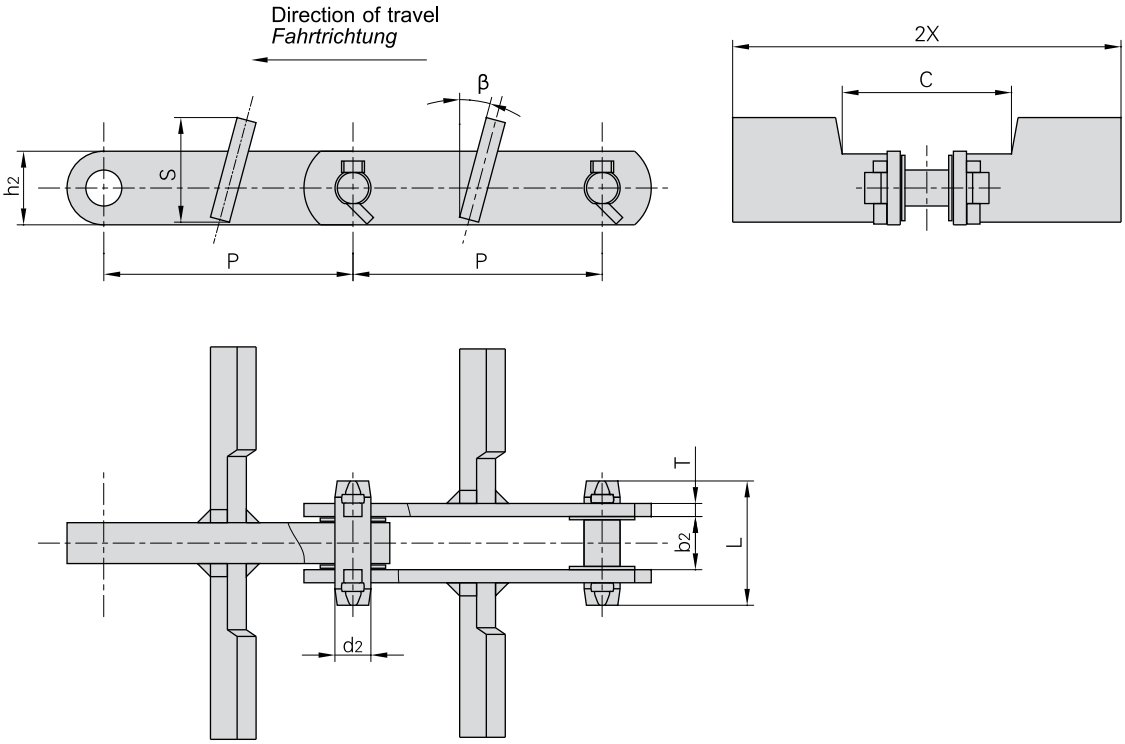

Donghua Chain No. *Donghua Ketten Nr.*	Pitch *Teilung*	Width between outer plates *Breite zwischen den Außen-laschen*	Pin diameter *Bolzen-durch-messer*	Pin length *Bolzen-länge*	Plate depth *Laschen-höhe*	Plate thickness *Laschen-dicke*	Attachment dimension *Befestigungs-laschen-abmessungen*				Ultimate tensile strength *Min. Bruchkraft*	Weight per meter *Gewicht*
	P	b_2	d_2	L	h_2	T	S	2X	C	β	Q	q
	mm	mm	mm	mm	mm	mm	mm	mm	mm		kN/LB	kg/m
P152F45	152.4	32.5	22.0	76.0	45.0	81	64.0	326	104	15°	260/58489	20.40
P152F45A	152.4	32.5	22.0	76.0	45.0	81	83.0	286	106	15°	260/58489	20.80
P152F45B	152.4	32.5	22.0	76.0	45.0	81	64.0	276	106	15°	260/58489	18.00
P152F45C	152.4	32.5	22.0	76.0	45.0	81	64.0	227	106	15°	260/58489	16.50
P152F47	152.4	34.0	22.0	85.0	45.0	12	81.0	400	106	15°	400/89983	30.90
P150F17A	150.0	25.0	18.5	66.3	38.1	10	115.0	180	90	15°	150/33743	14.50
P200F29	200.0	40.5	35.0	104.0	80.0	13	168.0	420	112	15°	530/119227	50.60
P200F29A	200.0	40.5	35.0	104.0	80.0	13	148.0	430	112	15°	530/119227	53.90
P200F35	200.0	33.0	26.5	79.0	50.0	10	145.5	430	210	15°	400/89983	28.93

Kratzer-Förderketten
Scraper conveyor chains
Chaînes de manutention pour transporteurs à raclettes

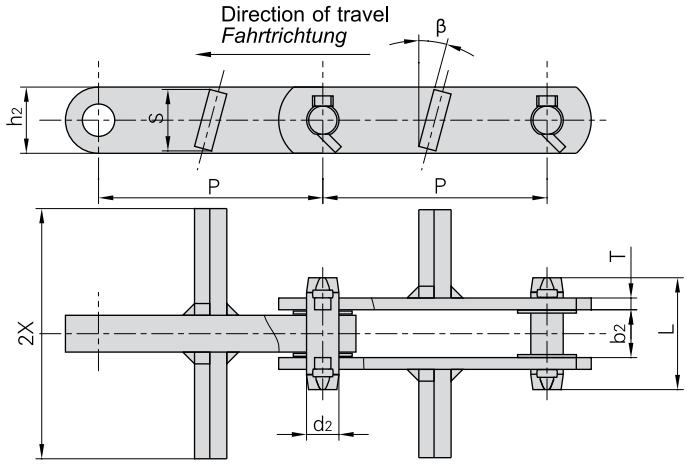

Donghua Chain No. *Donghua Ketten Nr.*	Pitch *Teilung*	Width between outer plates *Breite zwischen den Außen-laschen*	Pin diameter *Bolzen-durch-messer*	Pin length *Bolzen-länge*	Plate depth *Laschen-höhe*	Plate thickness *Laschen-dicke*	Attachment dimension *Befestigungs-laschen-abmessungen*			Ultimate tensile strength *Min. Bruchkraft*	Weight per meter *Gewicht*
	P	b_2	d_2	L	h_2	T	S	2X	β	Q	q
	mm	mm	mm	mm	mm	mm	mm	mm		kN/LB	kg/m
P101.6F20	101.6	16.5	17.46	53.7	38.0	6	34	210	45°	100/22496	7.26
P152F2	152.4	33.3	22.00	76.5	45.0	8	38	180	20°	260/58489	12.1
P152F45D	152.4	32.5	22.00	76.0	45.0	8	42	170	15°	260/58489	13.5
P152F45E	152.4	32.5	22.00	76.0	45.0	8	42	280	15°	260/58489	16.2
P152F45F	152.4	32.5	22.00	76.0	45.0	8	42	227	15°	260/58489	14.9
P152F46	152.4	40.8	25.00	86.0	50.0	9	49	290	15°	300/67487	20.8
P150F17B	150.0	25.0	18.50	67.3	38.1	10	36	178	15°	150/33743	10.6

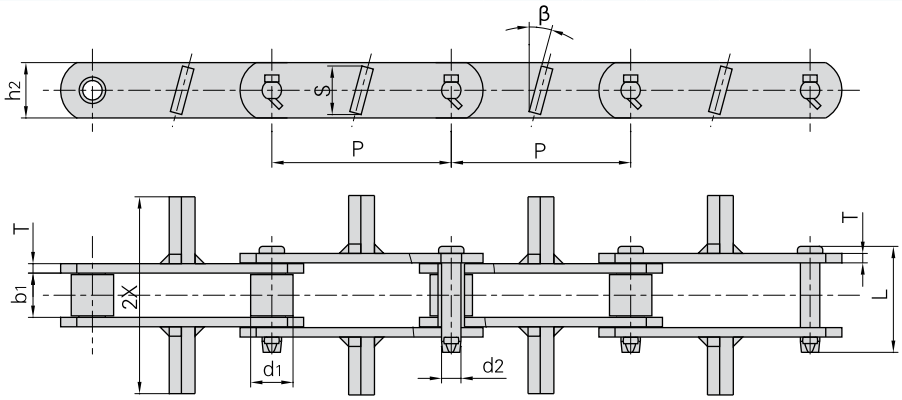

Donghua Chain No. *Donghua Ketten Nr.*	Pitch *Teilung*	Width between inner plates *Innere Breite*	Roller diameter *Rollen-durch-messer*	Pin diameter *Bolzen-durch-messer*	Pin length *Bolzen-länge*	Plate depth *Laschen-höhe*	Plate thickness *Laschen-dicke*	Attachment dimension *Befestigungs-laschen-abmessungen*			Ultimate tensile strength *Min. Bruchkraft*	Weight per meter *Gewicht*
	P	b_1	d_1	d_2	L	h_2	T	S	2X	β	Q	q
	mm	mm	mm	mm	mm	mm	mm	mm	mm		kN/LB	kg/m
P152F48	152.4	37.6	36.0	16.5	90	47	8	42	170	15°	180/40492	12.1
RO6205MF3	152.4	37.0	38.1	15.9	88	45	8	42	170	15°	170/38242	12.4

Kratzer-Förderketten
Scraper conveyor chains
Chaînes de manutention pour transporteurs à raclettes

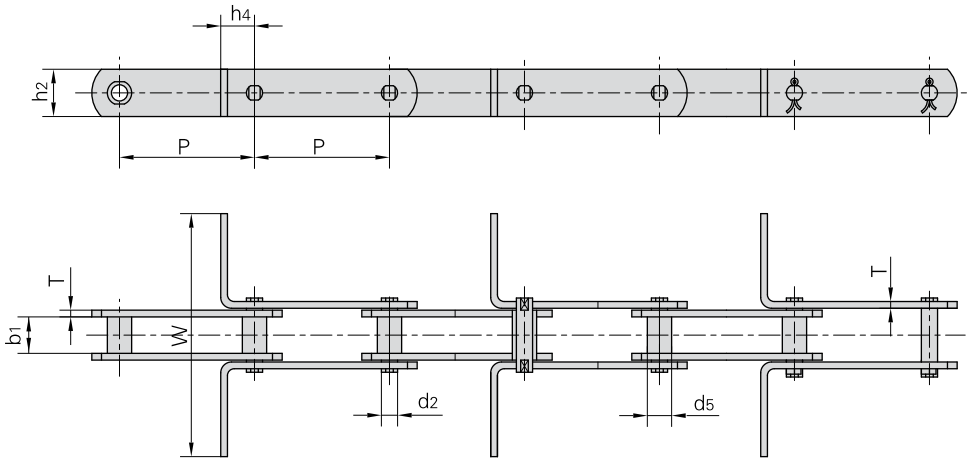

Donghua Chain No. *Donghua Ketten Nr.*	P			b_1 min	d_2 max	d_5 max	h_4	h_2 max	T max	W	Q min
	mm			mm	mm	mm	mm	mm	mm	mm	kN/LB
MR56	100	125	–	24.0	10.0	15.0	20.0	30.0	4.0	•	56.0/12727
MR80	100	125	160	28.0	12.0	18.0	25.0	35.0	5.0	•	80.0/18182
MR112	100	125	160	32.0	15.0	21.0	35.0	40.0	6.0	•	112.0/25454
MR160	100	125	160	37.0	18.0	25.0	40.0	50.0	7.0	•	160.0/36364
MR224	125	160	200	43.0	21.0	30.0	44.0	60.0	8.0	•	224.0/50909
MR315	160	200	250	48.0	25.0	36.0	50.0	70.0	10.0	•	315.0/71591

Donghua Chain No. *Donghua Ketten Nr.*	P			b_1 min	d_2 max	d_5 max	h_4	h_2 max	T max	W	Q min
	mm			mm	mm	mm	mm	mm	mm	mm	kN/LB
FVR40	80	100	125	18.0	10.0	15.0	20.0	25.0	3.0	•	42.0/9545
FVR63	100	125	160	22.0	12.0	18.0	25.0	30.0	4.0	•	64.0/14545
FVR90	100	125	160	25.0	14.0	20.0	30.0	35.0	5.0	•	100.0/22727
FVR112	100	125	160	30.0	16.0	22.0	35.0	40.0	6.0	•	120.0/27272
FVR140	125	160	200	35.0	18.0	26.0	38.0	45.0	6.0	•	145.0/32954
FVR180	125	160	200	45.0	20.0	30.0	44.0	50.0	8.0	•	190.0/43181
FVR250	160	200	250	55.0	26.0	36.0	50.0	60.0	8.0	•	275.0/62499

• dimensions upon the request of customers.
• *Die Abmessungen sind nach Kundenwunsch festzulegen.*

Kratzer-Förderketten
Scraper conveyor chains
Chaînes de manutention pour transporteurs à raclettes

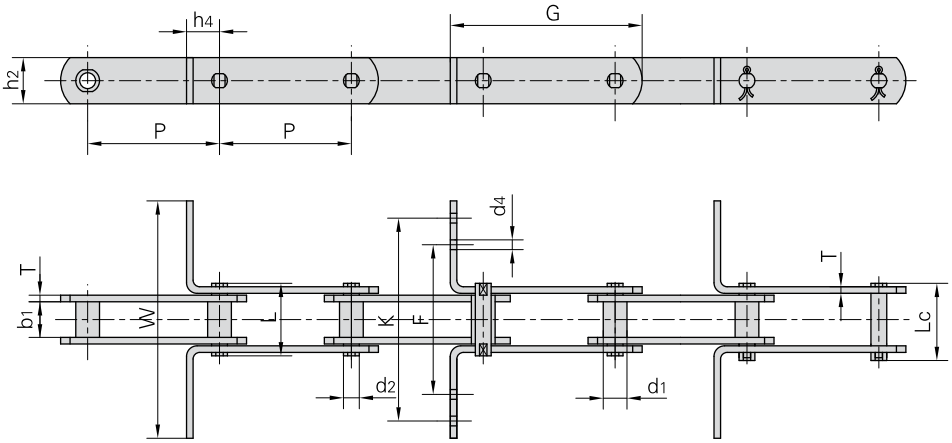

Donghua Chain No. *Donghua Ketten Nr.*	Pitch *Teilung*	Bush diameter *Buchsen-durch-messer*	Width between inner plates *Innere Breite*	Pin diameter *Bolzen-durch-messer*	Pin length *Bolzen-länge*		Ultimate tensile strength *Min. Bruchkraft*	Average tensile strength *Durchschn. Bruchkraft*	Weight per meter *Gewicht*
	P	d_1 max	b_1 min	d_2 max	L max	Lc max	Q min	Q_0	q
	mm	mm	mm	mm	mm	mm	kN/LB	kN	kg/m
M80–P100F1	100.0	18.0	28.00	12.00	55.0	58.5	80.0/18162	88.0	5.19
M180–P–100	100.0	26.0	28.85	18.00	62.5	–	180.0/40909	198.0	10.25
M310–P–125	125.0	40.0*	52.00	20.00	103.4	109.4	303.8/69045	334.0	19.88
M310F1–P–125	125.0	40.0*	52.00	20.00	103.4	109.4	303.8/69045	334.0	24.88
M310F1–P–150	150.0	40.0*	52.00	20.00	103.4	109.4	303.8/69045	334.0	19.13
FVR90F1–B–125	125.0	20.0	25.00	14.00	52.0	56.4	150.0/33743	165.0	6.16
P100F16	100.0	23.0	28.00	16.00	66.0	–	115.0/26136	127.0	6.60
P101.6	101.6	44.5	50.80	23.84	136.5	–	600.0/136362	660.0	34.96
P125F3	125.0	25.0	36.00	18.00	82.0	–	220.0/49999	242.0	11.17
P125F4	125.0	25.0	36.00	18.00	82.0	–	220.0/49999	242.0	9.83
P160F12	160.0	50.0*	34.00	20.00	77.8	–	160.0/35993	176.0	10.30

Donghua Chain No. *Donghua Ketten Nr.*	G	F	W	K	h_4	h_2	d_4	T
	mm	mm	mm	mm	mm	mm	mm	mm
M80–P100F1	145.5	–	180.0	–	25.0	35.0	–	5.0
M180–P–100	163.0	–	185.0	–	35.0	50.0	–	6.0
M310–P–125	195.0	–	270.0	–	35.0	55.0	–	10.0
M310F1–P–125	195.0	–	560.0	–	35.0	55.0	–	10.0
M310F1–P–150	220.0	–	350.0	–	40.0	50.0	–	10.0
FVR90F1–B–125	175.0	90.0	290.0	270.0	30.0	40.0	9.0	5.0
P100F16	143.0	91.8	180.0	159.8	25.0	36.0	6.5	6.0
P101.6	198.6	–	206.5	–	62.0	60.0	–	14.5
P125F3	190.0	139.5	290.0	259.5	35.0	51.0	8.5	6.0
P125F4	190.0	119.5	220.0	191.5	35.0	51.0	8.5	6.0
P160F12	230.0	–	214.5	–	40.0	50.0	–	6.0

* Indicate the external diameter of roller
* *Außendurchmesser der Rollen*

KÖBO-DONGHUA

The Chain People

Geschweißte Rotaryketten
Rotary chains
Rotary chains

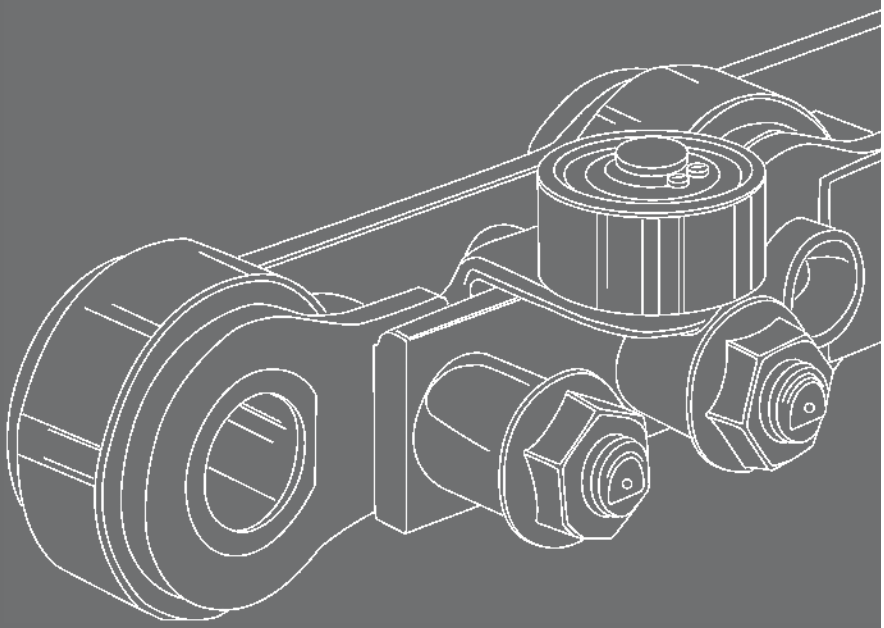

Zertifiziert nach DIN EN ISO 9001

Geschweißte Rotaryketten
Rotary chains
Rotary chains

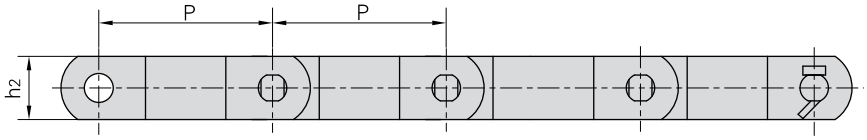

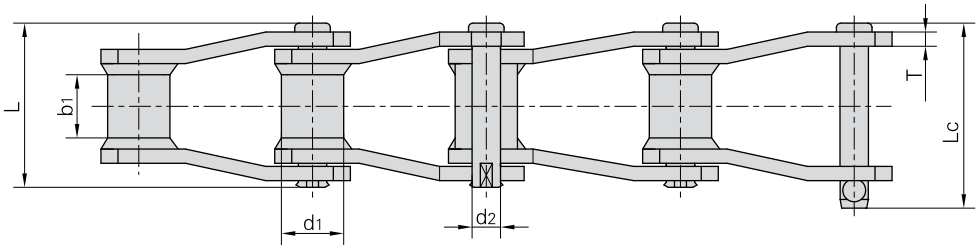

Donghua Chain No. *Donghua Ketten Nr.*	Pitch *Teilung*	Bush diameter *Buchsen-durch-messer*	Width between inner plates *Innere Breite*	Pin diameter *Bolzen-durch-messer*	Pin length *Bolzen-länge*		Plate depth *Laschen-höhe*	Plate thickness *Laschen-dicke*	Ultimate tensile strength *Min. Bruchkraft*	Average tensile strength *Durchschn. Bruchkraft*	Weight per meter *Gewicht*
	P	d_1 max	b_1 min	d_2 max	L max	Lc max	h_2 max	T	Q min	Q_0	q
	mm	mm	mm	mm	mm	mm	mm	mm	kN/LB	kN	kg/m
WR78 WH78	66.27	22.9	28.4	12.78	73.0	79.3	28.4	6.4	93.4/21227 106.8/24273	102.7 117.5	6.20
WR82 WH82	78.10	31.5	31.8	14.35	80.0	86.0	31.8	6.4	100.1/22750 131.2/29818	110.1 144.3	7.98
WR106 WH106	152.40	37.1	41.2	19.13	103.0	111.0	38.1	9.7	169.0/38409 224.6/51045	185.9 247.0	10.56
WR110 WH110	152.40	32.0	46.7	19.13	107.7	115.5	38.1	9.7	169.0/38409 224.6/51045	185.9 247.0	10.40
WR111 WH111	120.90	37.1	57.2	19.13	116.8	124.5	38.1	9.7	169.0/38409 224.6/51045	185.9 247.0	12.72
WR124 WH124	101.60	37.1	41.2	19.13	103.0	110.0	38.1	9.7	169.0/38409 224.6/51045	185.9 247.0	12.38
WR124H WH124H	103.20	41.7	41.2	22.30	131.6	133.0	50.8	12.7	275.8/62682 355.9/80886	303.3 391.4	19.68
WR132 WH132	153.67	44.7	76.2	25.48	151.0	162.2	50.8	12.7	275.8/62682 378.1/85932	303.3 415.9	20.00
WR150 WH150	153.67	44.45	73.0	25.40	151.0	162.2	63.5	12.7	620/140907	682	20.50
WR155 WH155	153.67	44.45	73.0	28.57	164.0	176.0	63.5	12.7	820/186361	902	20.70
WR157 WH157	153.67	44.45	76.2	28.57	164.0	176.0	63.5	15.9	820/186361	902	20.80

Note: WR - Welded steel chain c/w heat treated pins & bushings
WH - Welded steel chain - fully heat treated
Hinweis: WR – Wärmebehandlung nur für Bolzen und Buchsen
WH – Wärmebehandlung für alle Teilen

Befestigungslaschen für geschweißte Rotaryketten
Rotary chains with attachments
Plaques de fixation pour Rotary chains

With K1 attachments
Mit K1 Befestigungslaschen

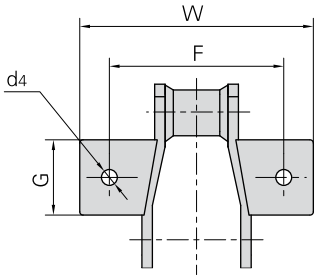

With A1 attachments
Mit A1 Befestigungslaschen

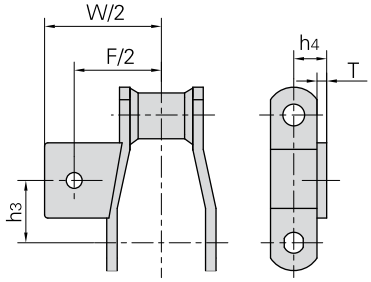

Donghua Chain No. *Donghua Ketten Nr.*	h_3	G	F	W	h_4	d_4	T
	mm	mm	mm	mm	mm	mm	mm
WR78 WH78	31.8	36.6	101.6	130.0	22.4	9.7	6.4
WR82 WH82	38.1	46.0	106.7	142.7	23.9	9.7	6.4

With K2 attachments
Mit K2 Befestigungslaschen

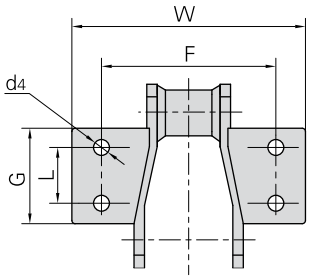

With A2 attachments
Mit A2 Befestigungslaschen

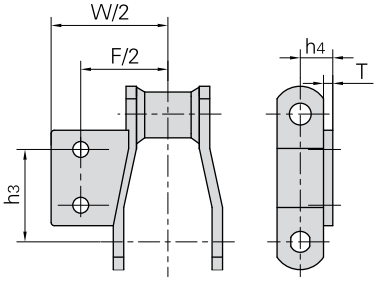

Donghua Chain No. *Donghua Ketten Nr.*	L	G	h_3	F	W	h_4	d_4	T
	mm	mm	mm	mm	mm	mm	mm	mm
WR78 WH78	28.4	52.3	38.9	101.6	130.0	22.4	9.7	6.4
WR82 WH82	33.3	62.0	52.3	108.2	142.7	23.9	9.7	6.4
WR110 WH110	44.4	84.1	98.6	135.1	168.1	30.0	9.7	9.7
WR111 WH111	58.7	90.4	89.9	159.0	193.5	30.0	12.7	9.7
WR124 WH124	49.3	77.7	71.4	133.6	180.8	30.0	9.7	9.7
WR124H WH124H	49.3	80.8	73.2	133.6	165.6	39.6	12.7	12.7
WR132 WH132	69.8	80.8	106.2	190.5	234.7	39.6	12.7	12.7

Befestigungslaschen für geschweißte Rotaryketten
Rotary chains with attachments
Plaques de fixation pour Rotary chains

With A22 attachments
Mit A22 Befestigungslaschen

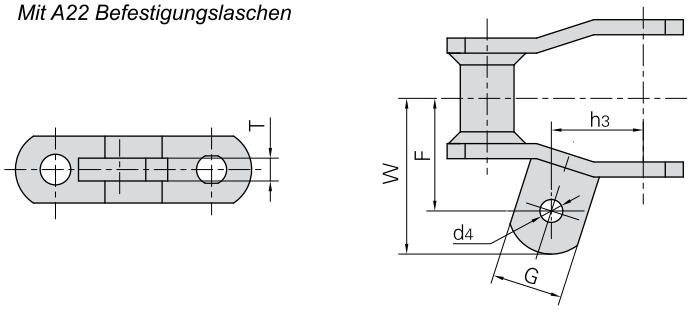

Donghua Chain No. *Donghua Ketten Nr.*	h3	G	F	W	d4	T
	mm	mm	mm	mm	mm	mm
WR78 WH78	33.3	30	47.8	65	9.7	9.7

With H1 attachments
Mit H1 Befestigungslaschen

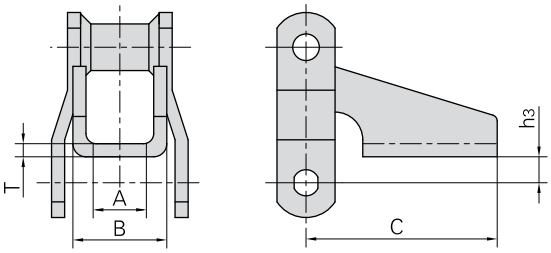

With H2 attachments
Mit H2 Befestigungslaschen

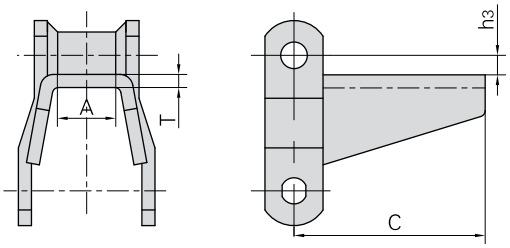

Donghua Chain No. *Donghua Ketten Nr.*	h3	A	B	C	T
	mm	mm	mm	mm	mm
WR78 WH78	12.7	22.4	50.8	93.5	6.4
WR82 WH82	15.7	28.4	57.2	93.5	6.4

Donghua Chain No. *Donghua Ketten Nr.*	h3	A	C	T
	mm	mm	mm	mm
WR78 WH78	7.9	20.8	93.5	6.4
WR82 WH82	7.9	26.4	96.8	6.4

Befestigungslaschen für geschweißte Rotaryketten
Rotary chains with attachments
Plaques de fixation pour Rotary chains

With F2 attachments
Mit F2 Befestigungslaschen

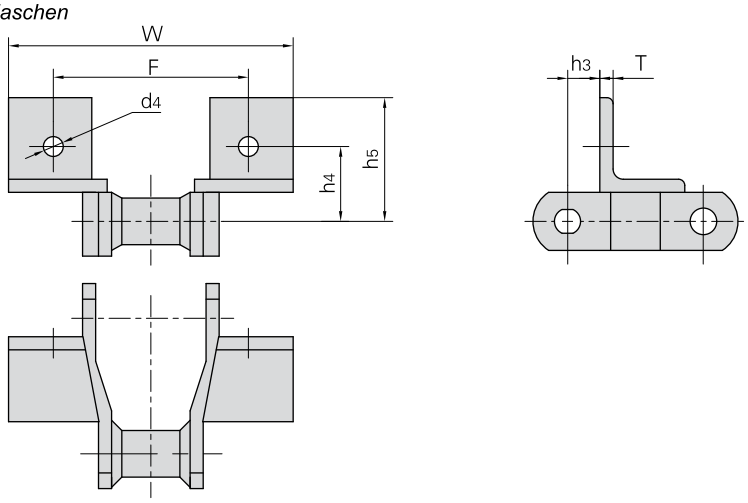

Donghua Chain No. *Donghua Ketten Nr.*	h_3	h_4	h_5	F	W	d_4	T
	mm	mm	mm	mm	mm	mm	mm
WR78 WH78	15.7	36.6	60.5	95.5	138.2	9.7	6.4

With F4 attachments
Mit F4 Befestigungslaschen

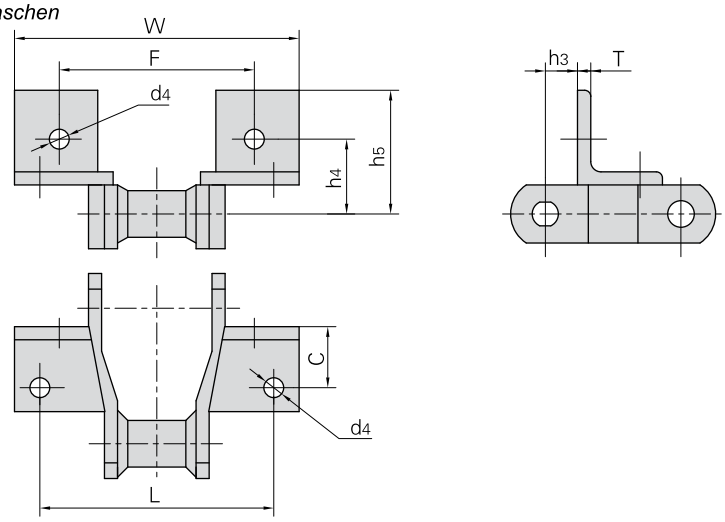

Donghua Chain No. *Donghua Ketten Nr.*	h_3	h_4	h_5	L	C	F	W	d_4	T
	mm	mm	mm	mm	mm	mm	mm	mm	mm
WR78 WH78	17.3	44.4	60.5	114.3	31.8	95.2	141.2	9.7	6.4
WR82 WH82	20.6	46.2	62.0	127.0	28.4	104.6	150.9	9.7	6.4
WR124 WH124	22.4	52.3	73.2	133.6	36.6	111.3	157.0	9.7	9.7

Befestigungslaschen für geschweißte Rotaryketten
Rotary chains with attachments
Plaques de fixation pour Rotary chains

With R1 & RR1 attachments
Mit R1 & RR1 Befestigungslaschen

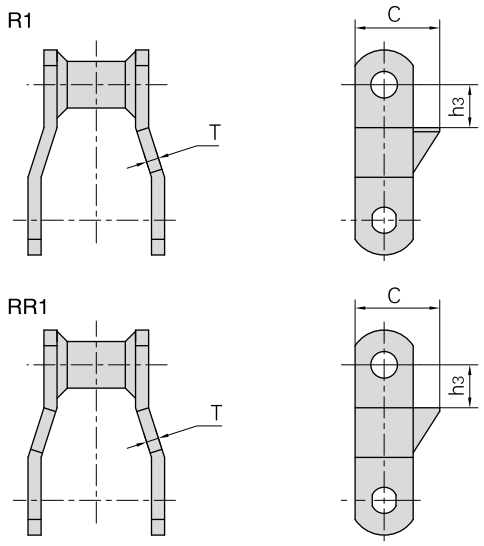

Donghua Chain No. *Donghua Ketten Nr.*	h3	C	T
	mm	mm	mm
WR78 WH78	17.3	41.1	6.4
WR82 WH82	22.4	49.3	6.4
WR124 WH124	31.8	49.3	9.7

With R2 & RR2 attachments
Mit R2 & RR2 Befestigungslaschen

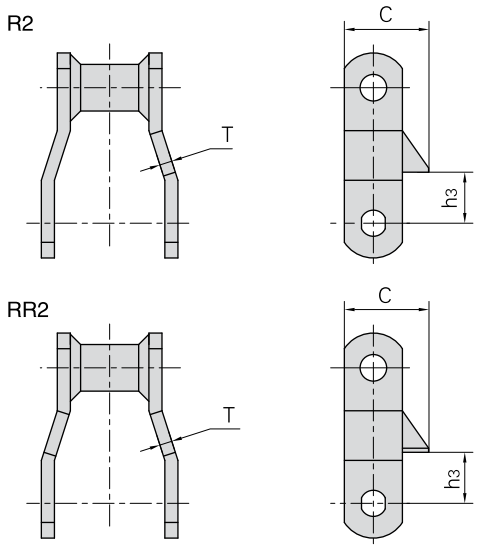

Donghua Chain No. *Donghua Ketten Nr.*	h3	C	T
	mm	mm	mm
WR78 WH78	17.3	41.1	6.4
WR82 WH82	22.4	49.3	6.4
WR124 WH124	31.8	49.3	9.7

With W1 attachments
Mit W1 Befestigungslaschen

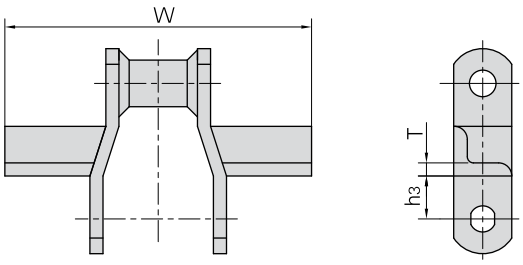

Donghua Chain No. *Donghua Ketten Nr.*	h3	W	T
	mm	mm	mm
WR78 WH78	19.1	153.9	6.4
WR82 WH82	23.9	166.6	6.4
WR124 WH124	30.0	217.4	6.4
WR124H WH124H	35.1	217.4	9.7
WR132 WH132	38.1	316.0	9.7

KÖBO-DONGHUA

The Chain People

Stahlbolzenketten
Steel pintle chains
Chaînes à axes acier

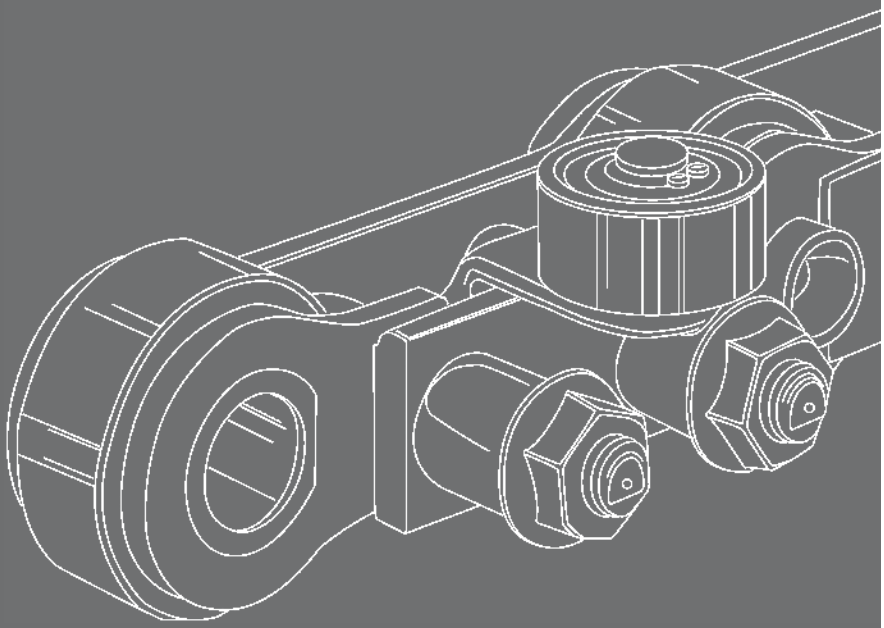

Zertifiziert nach DIN EN ISO 9001

Stahlbolzenketten
Steel pintle chains
Chaînes à axes acier

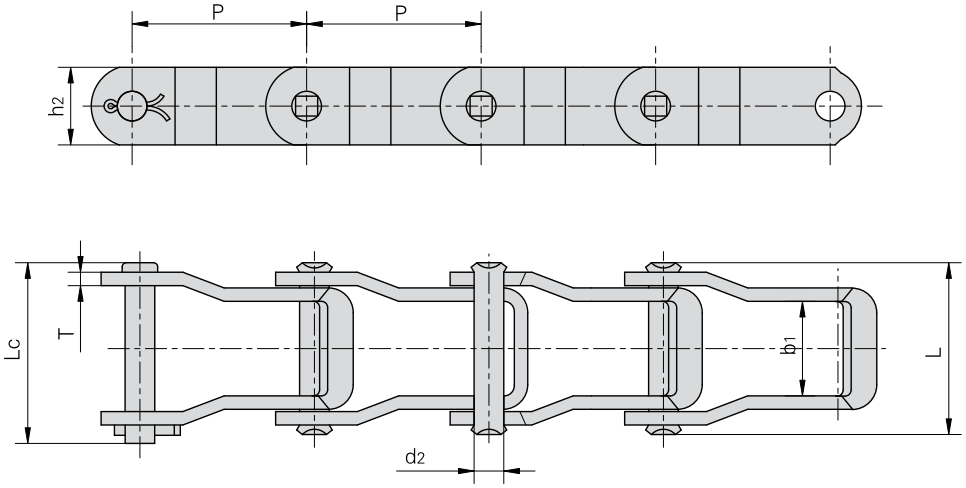

Donghua Chain No. *Donghua Ketten Nr.*	Pitch *Teilung*	Width between inner plates *Innere Breite*	Pin diameter *Bolzen-durch-messer*	Pin length *Bolzen-länge*		Plate depth *Laschen-höhe*	Plate thickness *Laschen-dicke*	Ultimate tensile strength *Min. Bruchkraft*	Average tensile strength *Durchschn. Bruchkraft*	Weight per meter *Gewicht*
	P	b_1 min	d_2 max	L max	Lc max	h_2 max	T	Q min	Q_0	q
	mm	mm	mm	mm	mm	mm	mm	kN/LB	kN	kg/m
662	42.27	22.9	7.19	41.2	44.2	18.8	3.2	37.80/8591	41.5	1.63
667H	58.75	25.4	7.94	43.7	46.7	22.2	3.2	42.30/9614	46.5	1.87
667X	57.15	26.6	11.10	50.2	55.0	23.8	4.3	66.70/15159	73.3	2.98
667XH	57.15	27.4	11.91	58.0	62.0	27.3	5.7	124.50/28295	136.9	4.34
667K	57.15	27.4	11.10	55.5	60.0	27.3	5.1	89.00/20227	97.9	3.91
667J	57.15	26.6	9.53	50.2	55.0	27.3	4.3	62.28/14155	68.5	2.81
88K	66.27	27.4	11.10	55.5	60.0	27.3	5.1	89.00/20227	97.9	3.73
88C	66.27	31.4	12.70	64.6	69.0	28.9	6.4	133.36/30309	146.6	5.17

Anbauteile für Stahlbolzenketten
Steel pintle chains with attachments
Composants pour chaînes à axes acier

With C1 attachments
Mit C1 Befestigungslaschen

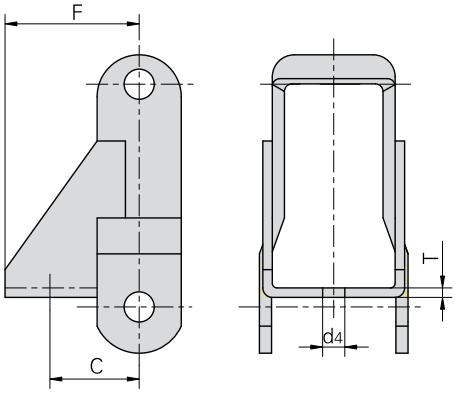

Donghua Chain No. *Donghua Ketten Nr.*	C	F	d4	T
	mm	mm	mm	mm
662	22.9	37.2	7.00	2.8
667H	25.4	38.9	7.00	4.8
667X	29.5	39.7	7.00	4.8

With AS attachments
Mit AS Befestigungslaschen

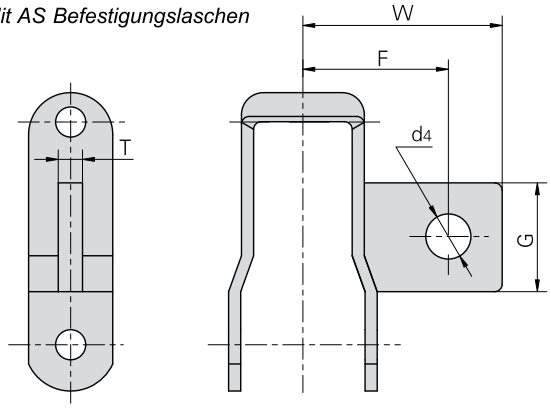

Donghua Chain No. *Donghua Ketten Nr.*	G	F	W	d4	T
	mm	mm	mm	mm	mm
662	24.2	35.9	48.4	7.00	4.3
667H	29.7	51.6	66.6	8.50	6.4
667X	29.7	51.6	69.0	8.50	7.9
667K	32.5	51.6	72.2	10.00	9.5
88K	32.5	51.6	72.2	10.00	9.5

With A22 attachments
Mit A22 Befestigungslaschen

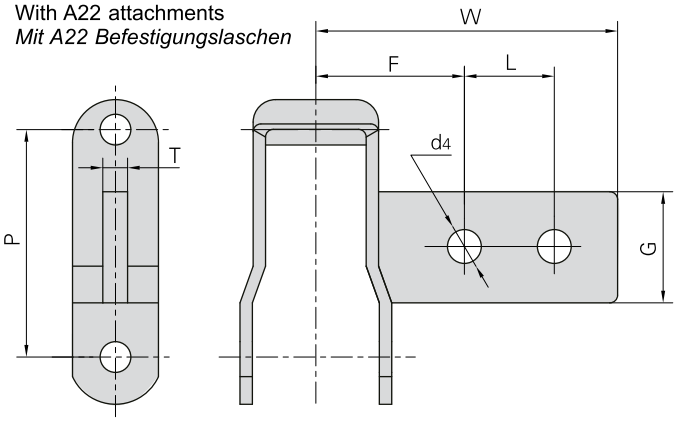

Donghua Chain No. *Donghua Ketten Nr.*	P	G	F	L	W	d4	T
	mm	mm	mm	mm	mm	mm	mm
662	42.27	24.2	34.9	15.9	60.3	6.75	4.3
88C	66.27	32.5	54.0	63.5	136.5	9.92	9.5
88K	66.27	32.5	54.0	63.5	136.5	9.92	9.5

With AN attachments
Mit AN Befestigungslaschen

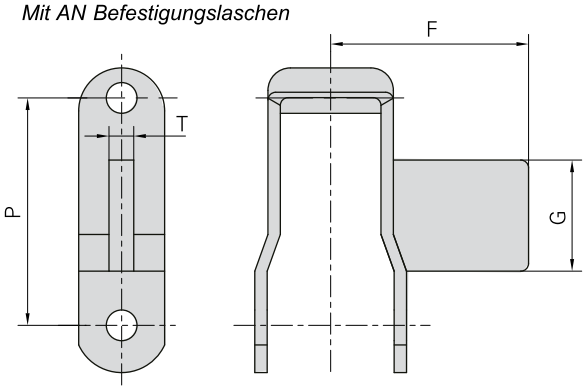

Donghua Chain No. *Donghua Ketten Nr.*	P	G	F	T
	mm	mm	mm	mm
662	42.27	24.2	47.6	4.3
667H	58.75	29.7	69.0	6.4
667X	57.15	29.7	68.3	7.9
667K	57.15	32.5	68.3	9.5
88K	66.27	32.5	68.3	9.5

Anbauteile für Stahlbolzenketten
Steel pintle chains with attachments
Composants pour chaînes à axes acier

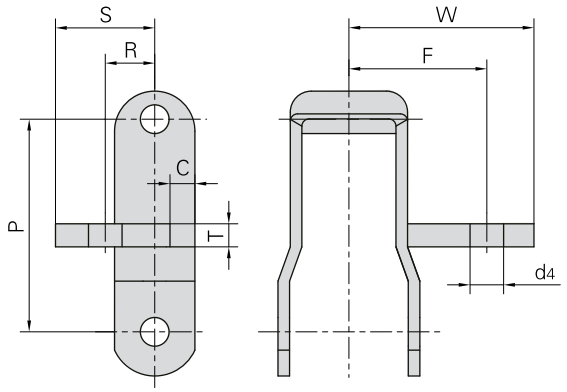

Donghua Chain No. / *Donghua Ketten Nr.*	Attachment No. / *Befestigungs-laschen Nr.*	P	R	S	F	W	d4	T	C
		mm	mm	mm	mm	mm	mm	mm	mm
662	G28	42.27	20.6	33.3	31.8	43.7	6.75	6.4	4.8
662	G30	42.27	19.1	33.3	33.3	48.0	8.33	6.4	4.8
662	G30S	42.27	19.1	33.3	33.3	48.0	8.73	6.4	4.8
667H	G27S	58.75	19.1	31.8	51.6	65.9	9.92	6.4	6.4

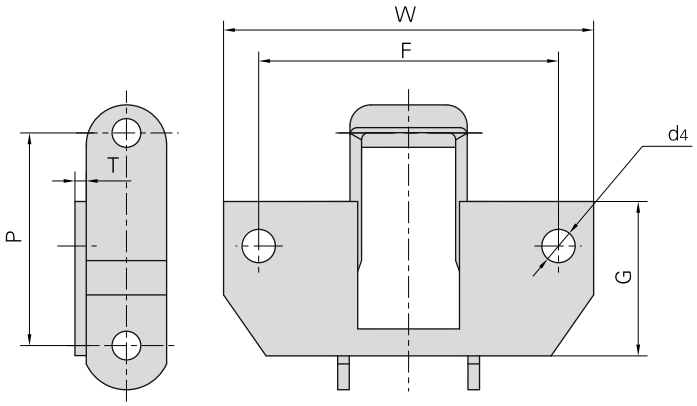

Donghua Chain No. / *Donghua Ketten Nr.*	Attachment No. / *Befestigungs-laschen Nr.*	P	G	F	W	d4	T
		mm	mm	mm	mm	mm	mm
662	K1	42.27	34.9	62.7	82.6	6.75	3.2
662	K19	42.27	34.9	50.8	71.4	6.75	3.2
667X	K1	57.15	34.9	62.7	82.6	6.75	3.2
667H	K1	58.75	34.9	62.7	82.6	6.75	3.2

Anbauteile für Stahlbolzenketten
Steel pintle chain with attachments
Composants pour chaînes à axes acier

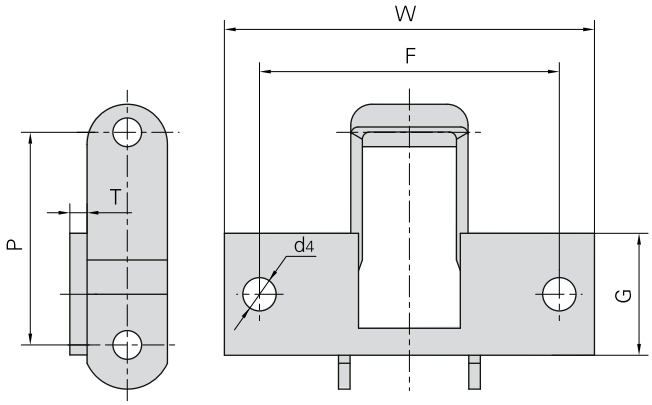

Donghua Chain No. *Donghua Ketten Nr.*	Attachment No. *Befestigungs-laschen Nr.*	P	G	F	W	d4	T
		mm	mm	mm	mm	mm	mm
88K	K1C	66.27	47.6	95.3	127.0	9.92	4.8
88K	K1M	66.27	47.6	101.6	127.0	9.92	4.8
88K	K1P	66.27	47.6	96.8	127.0	9.92	4.8

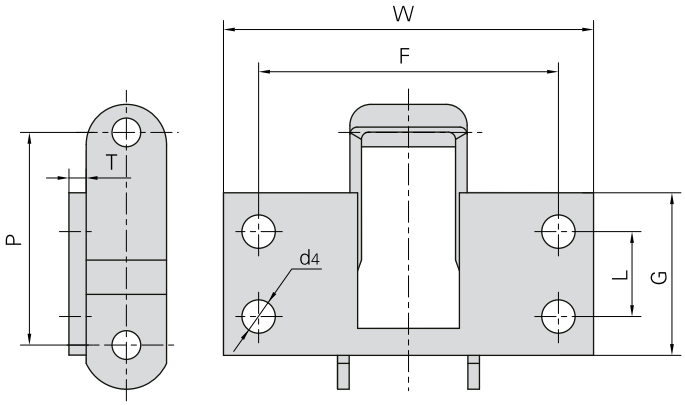

Donghua Chain No. *Donghua Ketten Nr.*	Attachment No. *Befestigungs-laschen Nr.*	P	L	G	F	W	d4	T
		mm	mm	mm	mm	mm	mm	mm
88K	K2C	66.27	31.8	57.2	106.4	127.0	9.92	4.8
88K	K2M	66.27	31.8	57.2	101.6	127.0	9.92	4.8
88K	K2P	66.27	31.8	57.2	92.0	127.0	9.92	4.8

Förderketten für Anlagen zur Herstellung der Furnierholzplatten
Conveyor chains for fibreboard equipment
Chaînes de manutention pour installations de fabrication de placage bois

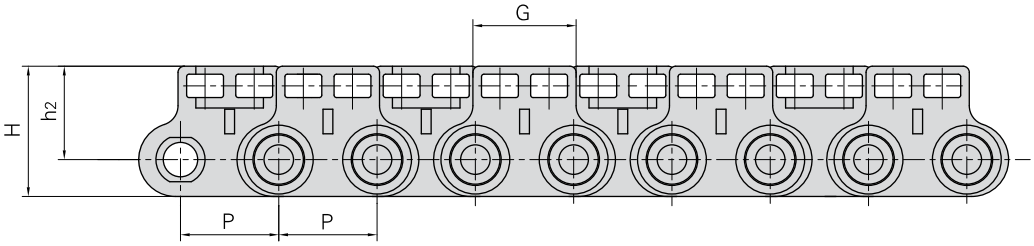

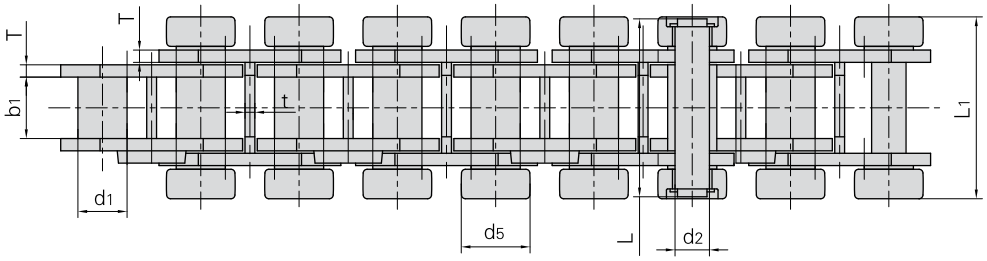

Donghua Chain No. *Donghua Ketten Nr.*	P	G	L_1	h_2	d_5	t
	mm	mm	mm	mm	mm	mm
P40	40.0	42.0	75.0	38.0	28.0	4.0

Donghua Chain No. *Donghua Ketten Nr.*	Pitch *Teilung*	Bush diameter *Buchsen-durch-messer*	Width between inner plates *Innere Breite*	Pin diameter *Bolzen-durch-messer*	Pin length *Bolzen-länge*	Plate depth *Laschen-höhe*	Plate thickness *Laschen-dicke*	Ultimate tensile strength *Min. Bruchkraft*	Weight per meter *Gewicht*
	P	d_1 max	b_1 min	d_2 max	L max	H max	T max	Q min	q
	mm	mm	mm	mm	mm	mm	mm	kN/LB	kg/m
P40	40.0	20.0	25.0	14.0	73.0	53.0	5.0	90.0/20250	10.67

Förderketten für den Straßenbau
Conveyor chains for crawler asphalt paver
Chaînes de manutention pour la construction routière

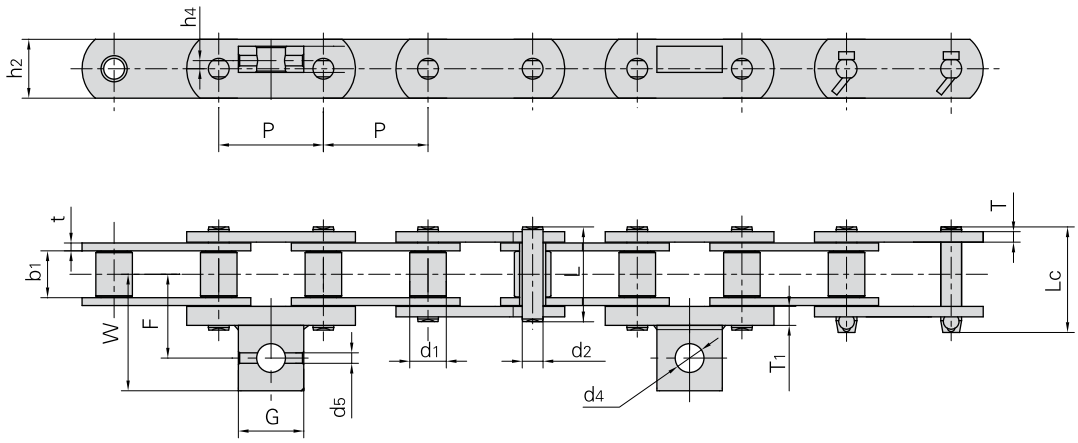

Donghua Chain No. *Donghua Ketten Nr.*	P	F	W	G	h_4	d_4	d_5	T_1
	mm	mm	mm	mm	mm	mm	mm	mm
P80F7	80.0	56.4	81.4	50.5	5.0	21.0	8.2	6.2
P80F8	80.0	63.0	88.0	50.0	2.0	22.0	10.2	14.2
P80F17	80.0	66.3	91.3	50.0	7.5	24.0	–	15.0
P80F19	80.0	56.5	81.5	50.0	2.8	22.0	8.0	20.0
P80F21	80.0	57.0	82.0	50.0	7.0	21.5	–	15.0

Donghua Chain No. *Donghua Ketten Nr.*	Pitch *Teilung*	Roller diameter *Rollen-durch-messer*	Width between inner plates *Innere Breite*	Pin diameter *Bolzen-durch-messer*	Pin length *Bolzen-länge*		Plate depth *Laschen-höhe*	Plate thickness *Laschen-dicke*	Ultimate tensile strength *Min. Bruchkraft*	Weight per meter *Gewicht*
	P	d_1 max	b_1 min	d_2 max	L max	Lc max	h_2 max	t/T max	Q min	q
	mm	mm	mm	mm	mm	mm	mm	mm	kN/LB	kg/m
P80F7	80.0	35.76	35.3	18.00	72.0	76.7	46.00	7.0/6.2	95.0/21370	11.91
P80F8	80.0	27.94	33.8	15.90	68.4	76.0	44.45	6.0/8.0	190.0/42741	10.80
P80F17	80.0	36.00	35.3	18.00	81.0	81.5	45.00	6.0/5.0	195.0/43866	12.90
P80F19	80.0	27.94	33.8	15.90	68.4	75.8	45.00	6.0/8.0	190.0/42741	11.20
P80F21	80.0	27.94	34.0	15.90	78.4	–	45.00	6.0/8.0	190.0/42741	10.70

Förderketten für den Straßenbau
Conveyor chains for crawler asphalt paver
Chaînes de manutention pour la construction routière

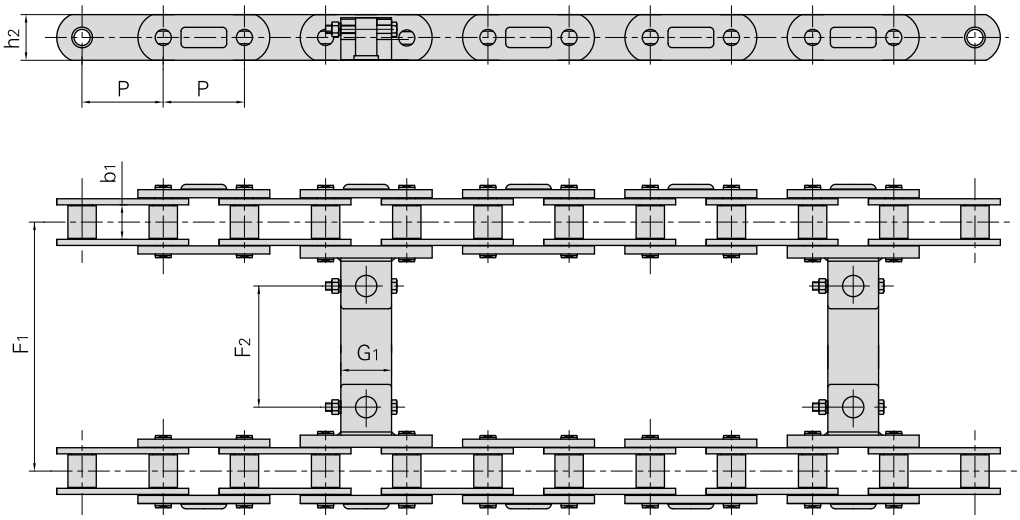

Donghua Chain No. *Donghua Ketten Nr.*	P mm	b_1 mm	h_2 mm	F_1 mm	F_2 mm	G_1 mm
P80F8	80.0	33.8	45.0	575.0	449.0	50.0
P80F17	80.0	35.3	45.0	575.0	442.4	50.0

KÖBO-DONGHUA

The Chain People

Ketten für die Palmölindustrie

Chains for palm oil industrie

Chaînes pour l'industrie de l'huile de palme

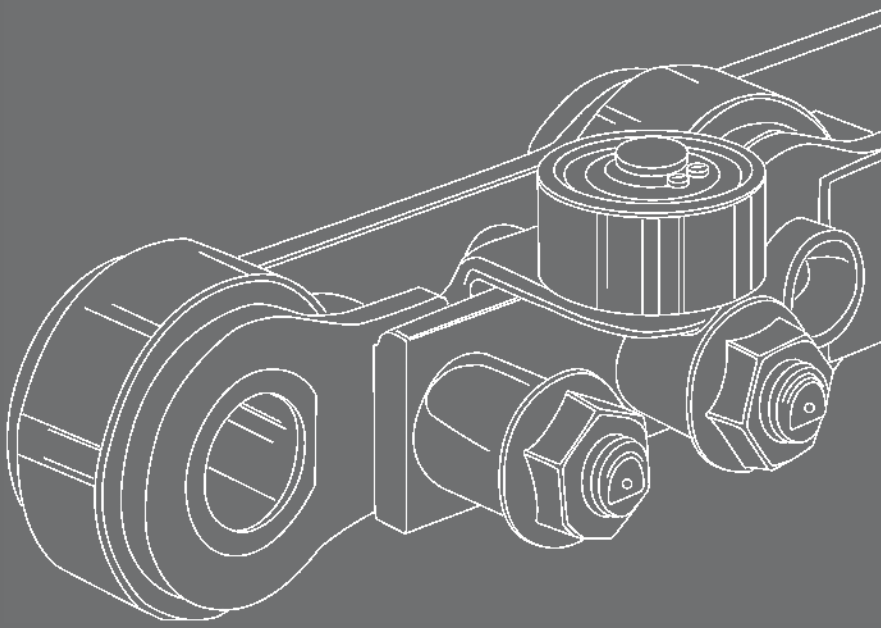

Zertifiziert nach DIN EN ISO 9001

Ketten für die Palmölindustrie
Chains for palm oil industrie
Chaînes pour l'industrie de l'huile de palme

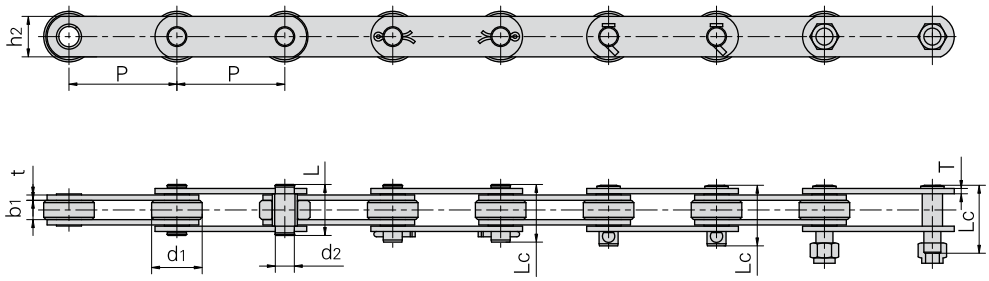

Donghua Chain No. *Donghua Ketten Nr.*	Pitch *Teilung*	Roller diameter *Rollen-durch-messer*	Width between inner plates *Innere Breite*	Plate depth *Laschen-höhe*	Pin diameter *Bolzen-durch-messer*	Pin length *Bolzen-länge*		Plate thickness *Laschen-dicke*	Ultimate tensile strength *Min. Bruchkraft*	Average tensile strength *Durchschn. Bruchkraft*	Weight per meter *Gewicht*
	P	d_1 max	b_1 min	h_2 max	d_2 max	L max	Lc max	t/T max	Q min	Q_0	q
	mm	mm	mm	mm	mm	mm	mm	mm	kN/LB	kN	kg/m
P101.6F2	101.6	47.6	18.2	38.1	19.10	48.0	65.0	5.0	97.8/22000	107.58	6.75
P152F14	152.4	47.6	18.2	38.1	19.10	48.0	52.0/50.5	5.0	89/20000	97.90	5.66
P152F17	152.4	66.7	25.4	50.8	27.00	67.5	88.5	8.0	163.3/36000	179.60	12.83
P152F29	152.4	66.7	25.4	50.8	27.00	69.5	111.5	9.0/8.0	200/45000	220.00	13.54
90R–S	101.6	47.6	21.4	31.8	11.32	–	55.7	4.8	80.36/18070	88.40	5.90
P101.6F64	101.6	50.8	30.0	38.1	14.50	–	69.0	6.3	132.7/29850	146.00	7.30
P76.7	76.7	29.0	30.0	38.1	14.50	–	73.0	6.3	100/25000	110.00	8.25
P152F31	152.4	88.9	38.1	61.0	31.80	–	98.5	10.0	266.72/60000	293.00	26.60

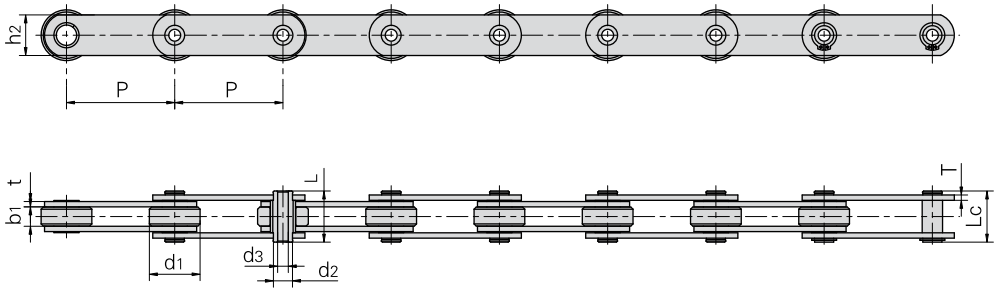

Donghua Chain No. *Donghua Ketten Nr.*	Pitch *Teilung*	Roller diameter *Rollen-durch-messer*	Width between inner plates *Innere Breite*	Plate depth *Laschen-höhe*	Pin diameter *Bolzen-durch-messer*		Pin length *Bolzen-länge*		Plate thickness *Laschen-dicke*	Ultimate tensile strength *Min. Bruchkraft*	Average tensile strength *Durchschn. Bruchkraft*	Weight per meter *Gewicht*
	P	d_1 max	b_1 min	h_2 max	d_2 max	d_3 min	L max	Lc max	t/T max	Q min	Q_0	q
	mm	mm	mm	mm	mm	mm	mm	mm	mm	kN/LB	kN	kg/m
P152F3	152.4	66.7	25.4	50.8	27.0	20.1	65.5	67.0	8.0	163.3/36000	179.6	11.73

KÖBO-DONGHUA

The Chain People

Ketten für die Zuckerindustrie
Chains for suger industry
Chaînes pour l'industrie sucrière

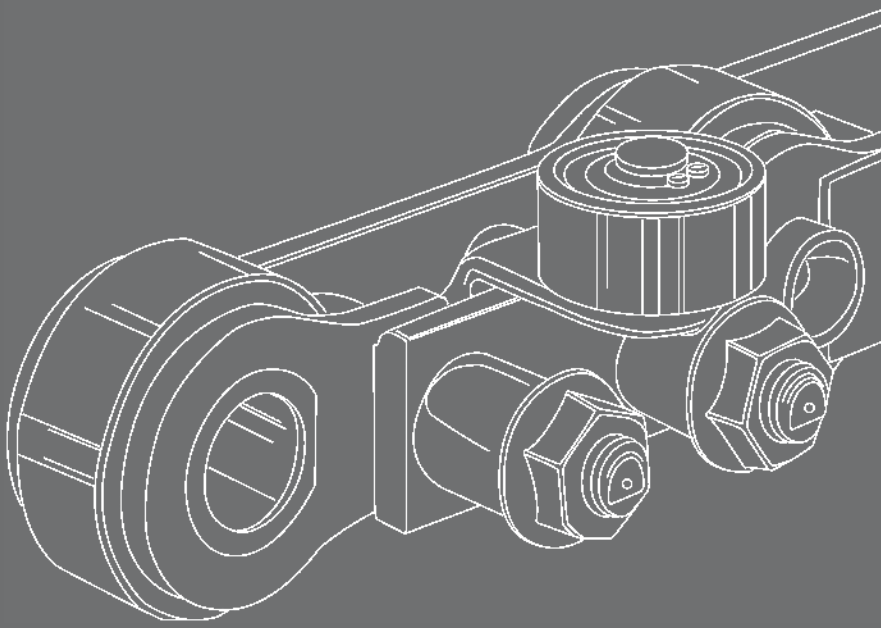

Zertifiziert nach DIN EN ISO 9001

Ketten für die Zuckerindustrie
Chains for suger industry
Chaînes pour l'industrie sucrière

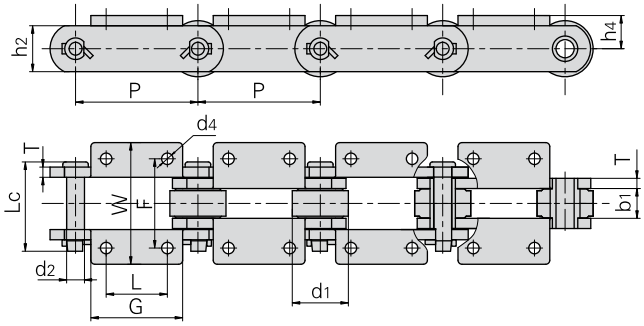

Donghua Chain No. *Donghua Ketten Nr.*	P	G	L	F	W	h4	d4
	mm	mm	mm	mm	mm	mm	mm
DH 9063	152.4	114.3	76.2	111.13	165.86	44.45	14.3
DH 2198	152.4	114.3	76.2	111.25	152.40	41.40	14.3

Donghua Chain No. *Donghua Ketten Nr.*	Pitch *Teilung*	Roller diameter *Rollen-durch-messer*	Width between inner plates *Innere Breite*	Pin diameter *Bolzen-durch-messer*	Pin length *Bolzen-länge*	Plate depth *Laschen-höhe*	Plate thickness *Laschen-dicke*	Ultimate tensile strength *Min. Bruchkraft*	Average tensile strength *Durchschn. Bruchkraft*	Weight per meter *Gewicht*
	P	d_1 max	b_1 min	d_2 max	Lc max	h_2 max	T max	Q min	Q_0	q
	mm	mm	mm	mm	mm	mm	mm	kN/LB	kN	kg/m
DH 9063	152.4	76.20	38.1	23.83	103.2	61.00	10.3	445.0/100000	489.0	27.5
DH 2198	152.4	69.85	38.1	22.23	111.2	57.15	12.7	404.5/91000	445.0	27.9

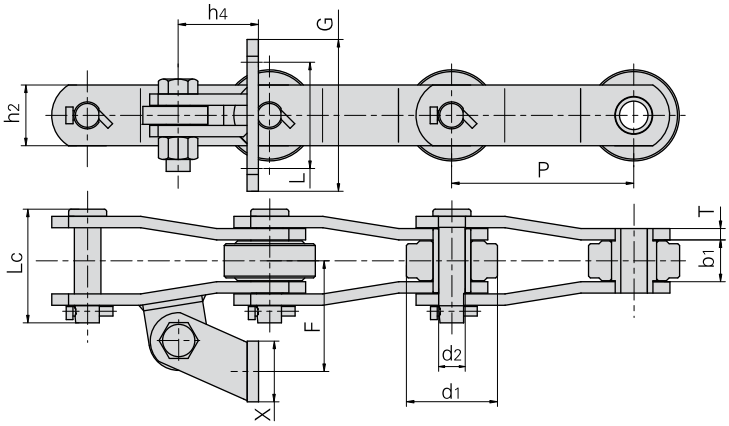

Donghua Chain No. *Donghua Ketten Nr.*	P	G	L	F	X	h4
	mm	mm	mm	mm	mm	mm
DH 09060	152.4	114.3	82.6	88.9	50.8	111.25
DH 1796	152.4	114.3	82.6	88.9	50.8	111.25

Donghua Chain No. *Donghua Ketten Nr.*	Pitch *Teilung*	Roller diameter *Rollen-durch-messer*	Width between inner plates *Innere Breite*	Pin diameter *Bolzen-durch-messer*	Pin length *Bolzen-länge*	Plate depth *Laschen-höhe*	Plate thickness *Laschen-dicke*	Ultimate tensile strength *Min. Bruchkraft*	Average tensile strength *Durchschn. Bruchkraft*
	P	d_1 max	b_1 min	d_2 max	Lc max	h_2 max	T max	Q min	Q_0
	mm	mm	mm	mm	mm	mm	mm	kN/LB	kN
DH 09060	152.4	69.85	38.1	19.05	96.6	50.80	9.65	270/60740	297.0
DH 1796	152.4	69.85	38.1	22.35	100.0	57.15	9.65	445/100100	489.5

Scharnierbandketten
Flat-top conveyor chains
Chaînes à charnière

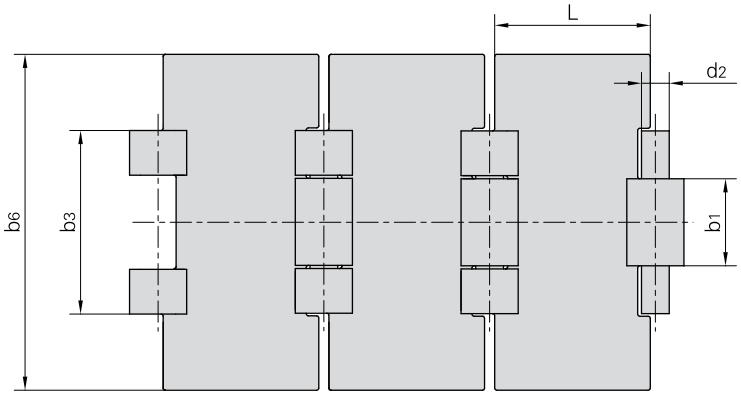

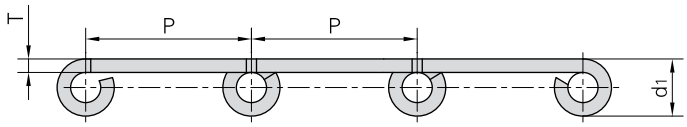

Donghua Chain No. *Donghua Ketten Nr.*	P	b_6 max	d_1 max	d_2 max	T max	L	b_1 max	b_3 max	Ultimate tensile strength *Min. Bruchkraft* Material 1Cr18Ni9Ti	Ultimate tensile strength *Min. Bruchkraft* *Material* 1Cr13 2Cr13	Weight per meter *Gewicht*
	mm	mm	mm	mm	mm	mm	mm	mm	kN min	kN min	kg/m
C12S	38.1	76.2	13.13	6.38	3.35	37.28	20	42.05	8.00	6.25	2.39
C13S		82.6									2.55
C14S		88.9									2.70
C16S		101.6									2.99
C18S		114.3									3.29
C24S		152.4									4.17
C30S		190.5									5.06

Scharnierbandketten
Flat-top conveyor chains
Chaînes à charnière

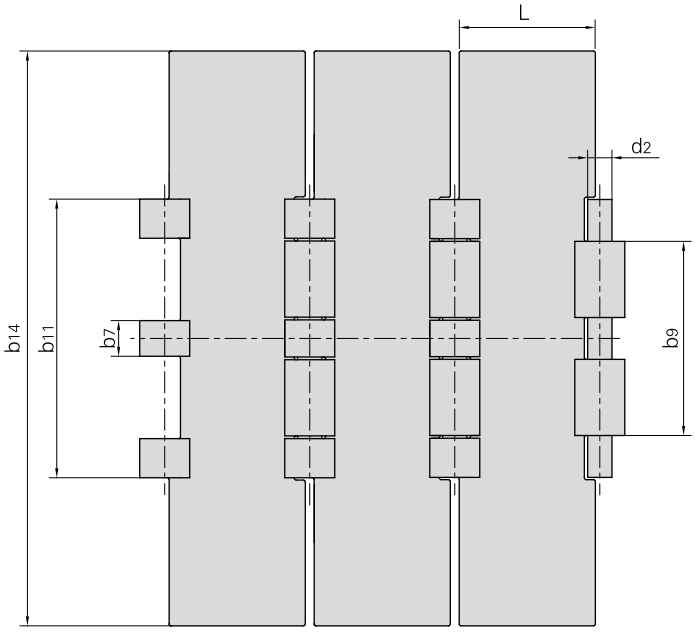

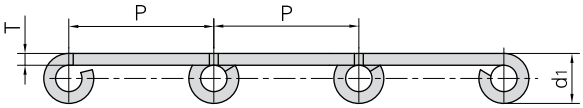

Donghua Chain No. *Donghua Ketten Nr.*	P	b_{14} max	d_1 max	d_2 max	T max	L	b_9 max	b_{11} max	Ultimate tensile strength *Min. Bruchkraft* Material 1Cr18Ni9Ti	Ultimate tensile strength *Min. Bruchkraft* *Material* 1Cr13 2Cr13	Weight per meter *Gewicht*
	mm	mm	mm	mm	mm	mm	mm	mm	kN min	kN min	kg/m
C30D	38.1	190.5	13.13	6.38	3.35	13.5	53.5	80.5	16.00	12.50	5.87